Profile	Reference	Press. ≤ (MPa) ✱	Temp. (°C) ✱	Speed (m/s) ✱	Material	Dimensions (mm)	mm	inch	Page
4a Double acting piston seals									
	10TPI	35	-35 +100	0,5	**NBR/POM**	7/8” … 12”		●	**440 - 441**
	10DBS.../AE	40	-40 +110	0,5	**NBR/POM/TPE**	32 … 150	●		**442 - 443**
	10DPC.../NEO	50	-30 +100	0,5	**NBR-C/NBR/POM**	50 … 280	●		**444 - 445**
	10TDO	4	-30 +100	0,5	**NBR/Met.**	26 … 300	●		**446 - 447**
	10GPS **10GPS.../LP**	40 25	-30 +100	0,5	**PU/NBR**	12 … 250	●		**448 - 451**
	10E/GH	50	-30 +100	0,5	**TPE/NBR**	12 … 140	●		**452 - 453**
	10GPSK	40	-30 +100	0,5	**PU/NBR**	20 … 200	●		**454 - 455**
	10EPK	40	-30 +100	0,5	**PU+MoS_2/NBR**	25 … 320	●		**456 - 457**
	10GPK	80	-30 +100	1	**PA/NBR**	40 … 320	●		**458 - 459**
	10E/GR...A **10E/GRINCH...A**	50	-30 +100	15	**PTFE/NBR**	10 … 600 1,5” … 6”	●	●	**460 - 465** **466 - 467**
	11E/GR...A	50	-10 +200	15	**PTFE/FPM**	25 … 250	●		**468 - 469**
	10E/GRKA	50	-30 +100	15	**PTFE/NBR**	25 … 320	●		**470 - 471**
	10PHD	40	-30 +110	1,5	**PTFE/NBR/POM**	40 … 320	●		**472 - 473**
	10PHD.../PU	40	-30 +110	1,5	**PU/NBR/POM**	50 … 250	●		**474 - 475**
	10KRGG	200	-60 +250	40	**Cast iron**	25 … 180	●	●	**476 - 477**

✱ See page 8

4b Double acting piston seals with guide rings

Profile	Reference	Press. ≤ (MPa) ✱	Temp. (°C) ✱	Speed (m/s) ✱	Material	Dimensions (mm)	mm	inch	Page
	10DBS 10DBS/I	35	-30 +100	0,5	NBR/TPE/POM	20 … 320 1,5” … 7”	●	 ●	478 - 485 488 - 489
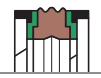	11DBS...FPM	35	-10 +120	0,5	FPM/TPE/POM	40 … 110	●		486 - 487
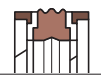	11DBS...FPM/PT	35	-10 +120	0,5	FPM/PT01/PT55	40 … 100	●		486 - 487
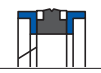	10DCS	25	-30 +100	0,5	NBR/PTFE/POM	25 … 125	●		490 - 491
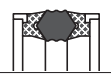	10DSM	70	-40 +130	0,5	NBR/NBR-C/POM	45 … 380	●	●	492 -493
	10DPS	35	-30 +130	0,5	NBR-C/NBR/POM	25 … 250	●	●	494 - 495
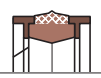	11DPS...FPM-C	35	-10 +150	0,5	FPM-C/FPM/PTFE	50 … 140	●		496 - 497
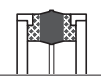	10D11W	50	-30 +100	0,5	NBR/NBR-C/POM	38,1 … 300	●	●	498 - 499
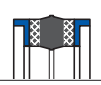	10D11W.../H	40	-30 +100	0,5	NBR/NBR-C/POM	25 … 177,8	●	●	500 - 501
	10EUD.../P	40	-30 +100	0,5	PU/POM	25 … 110	●		502 - 503
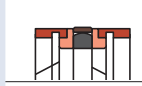	12GD1000K HUNGER Dichtungen	36 (63)	-30 +120 -45 +120	1	PTFE/NBR/TPE/POM	40 … 600	●		504 - 507
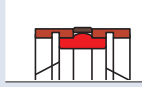	12GKD HUNGER Dichtungen	36 (63)	-35 +100	1	PTFE/PU/POM	40 … 280	●		508 - 509

✱ See page 8

4c Single acting piston seals

Profile	Reference	Press. ≤ (MPa) ✱	Temp. (°C) ✱	Speed (m/s) ✱	Material	Dimensions (mm)	mm	inch	Page
	10DC	4	-30 +100	0,25	NBR	7/16” … 16”		●	510 - 511
	10DDE 10DDEM	8	-30 +100	0,5	NBR	1/2” … 12” 12 … 250	 ●	●	512 - 513 514 - 515
	10DDEM.../C	12	-30 +100	0,5	NBR	20 … 200	●		516 - 517
	11DDEM.../C FPM	12	-10 + 200	0,5	FPM	20 … 200	●		518 - 519
	10DUM 10DU	10	-15 +120	0,5	NBR	12 … 500 3/8” … 6”1/4	●	 ●	520 - 523 524 - 525
	10DUM.../N	10	-30 +100	0,5	NBR	12 … 140	●		526 - 529
	10B.../NWO/KR	50	-30 +120	0,5	NBR/NBR-C/POM	35 … 125	●		530 - 531
	10DS	25	-40 +120	0,5	NBR-C/NBR	24 … 300	●		532 - 533
	10DS.../NEO	50	-40 +120	0,5	NBR-C/NBR/POM	63 … 160	●		534 - 535
	10DS.../M	40	-40 +120	0,5	NBR-C	40 … 200	●		536 - 537
	10CH3	40	-30 +120	0,5	NBR-C/POM	30 … 300	●		538 - 539
	11CH3 FPM-C	40	-10 +150	0,5	FPM-C	40 … 300	●		540 - 541
	10MU	40	-30 +100	0,5	PU	9 … 380	●		542 - 559
	10RSE	40	-30 +100	0,5	PU	14 … 280	●		560 - 563
	12TDA HUNGER Dichtungen	36 (63)	-35 +100	1	PU/PTFE	50 … 250	●		564 - 565
	10RSE.../AE	50	-30 +100	0,5	PU/POM	40 … 250	●		566 - 567
	10RSE.../W/AR	40	-30 +100	0,5	PU/POM	32 … 140	●		568 - 569
	10EUS/I	40	-30 +100	0,5	PU/NBR	1/2” … 8”1/2		●	570 - 573
	10E/GR...B	50	-30 +100	15	PTFE/NBR	14 … 250	●		574 - 575
	10VOP	20	-70 +260	15	PT02/SS	25 … 200	●	●	576 - 577

Profile	Reference	Press. ≤ (MPa) ✱	Temp. (°C) ✱	Speed (m/s) ✱	Material	Dimensions (mm)	mm	inch	Page
4d TSS piston seals									
	10DBM Polypac® Balemaster	35	-30 +100	0,5	**NBR/TPE/POM**	40 … 220	●	●	**578 - 579**
	10EUD Polypac® Euroseal	40	-30 +100	0,5	**PU/NBR/POM**	50 … 125	●		**580 - 581**
	10DPC Polypac® Duopac	50	-30 +120	0,5	**NBR-C/POM**	30 … 150	●		**582 - 583**
	17PT Turcon® Glyd Ring® T	50 50	-30 +100 -10 +200	15 15	**Turcon® T46/NBR** **Turcon® T46/FPM**	10 … 500	●		**584 - 587**
	17PSK Turcon® Stepseal® 2K	50	-30 +100 -10 +200	15	**Turcon® T46/NBR** **Turcon® T46/FPM**	14 … 420	●		**588 - 589**
	17PQ Turcon® AQ Seal®	40	-30 +100 -10 +200	2	**Turcon® T46/NBR** **Turcon® T46/FPM**	16 … 400	●		**590 - 591**
	17PQ0 Turcon® AQ Seal® 5	50	-30 +100 -10 +200	3	**Turcon® T46/NBR** **Turcon® T46/FPM**	32 … 540	●		**592 - 593**
	17PDD Turcon® Double Delta®	35	-30 +100 -10 +200	15	**Turcon® T46/NBR** **Turcon® T46/FPM**	16 … 200	●		**594 - 595**
	17PVA Turcon® Variseal® M2	40	-70 +260	15	**Turcon® T40/SS**	10 … 200	●		**596 - 597**

✱ See page 8

Double acting piston T-seal

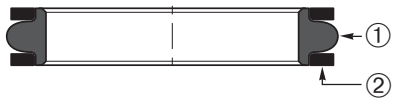

10TPI

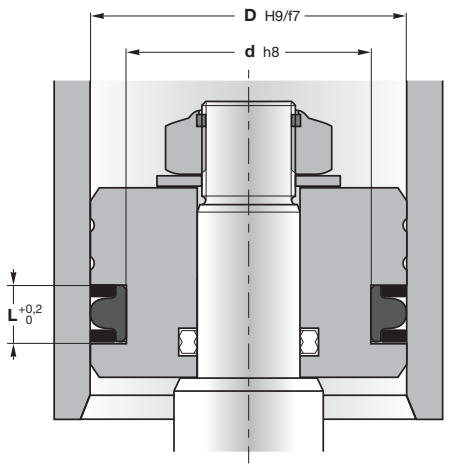

Machining of housings: see pages 48-49

10TPI piston T-seal combines a resilient sealing ring with a hard split back-up ring on each side of the sealing element.

Its compact design provides improved stability and extrusion resistance in dynamic fluid sealing applications. The flange or base of the T-seal forms a tight seal in the gland and supports the anti-extrusion back-up rings.

The Piston T-seal **eliminates** the spiral or twisting failure that can occur when O-rings are used against a dynamic surface.

Operating conditions	**see page 8**
Pressure	≤ 35 MPa
Temperature	-35°C to 100°C
Speed	≤ 0,5 m/s
Fluids	**see pages 22-45**

Materials	**see pages 10-19**
Seal ①	NBR1970
Anti-extrusion rings ②	POM

Assembly	**see pages 54-59**
On one-piece pistons	

Advantages

- Compact design
- High extrusion resistance
- Easy to fit
- Double acting
- No twisting

Please contact us for applications approaching maximum values.

More information

On **www.all-tec-business.net**, click first on the reference and then on the material code to obtain the data sheet of the different materials.

For special requirements (fluid, temperature, pressure, speed...) or applications approaching maximum values, please contact us. Other materials available: **FPM**, **HNBR**, **TNBR**, **EPDM**...

D	d	L	Reference
22,22	16,05	4,7	**10TPI 0875**
25,4	19,25	4,7	**10TPI 1000**
28,57	22,43	4,7	**10TPI 1125**
31,75	25,6	4,7	**10TPI 1250**
34,92	28,78	4,7	**10TPI 1375**
38,1	31,95	4,7	**10TPI 1500**
41,27	35,13	4,7	**10TPI 1625**
44,45	38,3	4,7	**10TPI 1750**
47,62	38,21	7,11	**10TPI 1875**
50,8	41,38	7,11	**10TPI 2000**
53,97	44,55	7,11	**10TPI 2125**
57,15	47,73	7,11	**10TPI 2250**
60,32	50,91	7,11	**10TPI 2375**
63,5	54,08	7,11	**10TPI 2500**
66,67	57,25	7,11	**10TPI 2625**
69,85	60,43	7,11	**10TPI 2750**
73,02	63,63	7,11	**10TPI 2875**
76,2	66,78	7,11	**10TPI 3000**
79,37	69,96	7,11	**10TPI 3125**
82,55	73,15	7,11	**10TPI 3250**
88,9	79,48	7,11	**10TPI 3500**
92,07	82,66	7,11	**10TPI 3625**
95,25	85,83	7,11	**10TPI 3750**
98,42	89,01	7,11	**10TPI 3875**
101,6	92,18	7,11	**10TPI 4000**
104,77	95,36	7,11	**10TPI 4125**
107,95	98,53	7,11	**10TPI 4250**

D	d	L	Reference
111,12	101,71	7,11	**10TPI 4375**
114,3	104,88	7,11	**10TPI 4500**
120,65	111,23	7,11	**10TPI 4750**
123,82	114,41	7,11	**10TPI 4875**
127	117,65	7,11	**10TPI 5000**
130,17	118,16	9,3	**10TPI 5125**
133,35	121,34	9,3	**10TPI 5250**
139,7	127,69	9,3	**10TPI 5500**
146,05	134,04	9,3	**10TPI 5750**
149,23	137,21	9,3	**10TPI 5875**
152,4	140,39	9,3	**10TPI 6000**
158,75	146,74	9,3	**10TPI 6250**
165,1	153,11	9,3	**10TPI 6500**
177,8	165,81	9,3	**10TPI 7000**
190,5	178,51	9,3	**10TPI 7500**
203,2	191,21	9,3	**10TPI 8000**
209,55	197,56	9,3	**10TPI 8250**
215,9	203,89	9,3	**10TPI 8500**
228,6	216,61	9,3	**10TPI 9000**
241,3	229,31	9,3	**10TPI 9500**
254	242,01	9,3	**10TPI 10000**
266,7	254,71	9,3	**10TPI 10500**
279,4	267,41	9,3	**10TPI 11000**
292,1	280,04	9,3	**10TPI 11500**
304,8	292,81	9,3	**10TPI 12000**

10TPI seals with diameters between 20 and 1500 mm can be manufactured within short delivery time.
For prices and availability: **www.all-tec-business.net**

Compact double acting piston seal with back-up rings

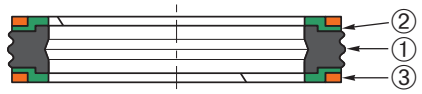

10DBS.../AE

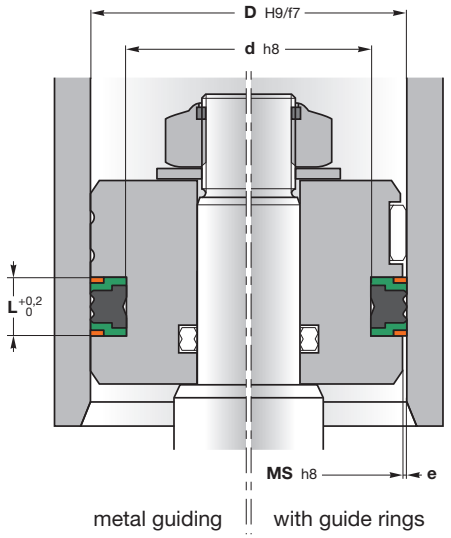

MS = D - 2e

Machining of housings: see pages 48-49

10DBS.../AE is a sealing rubber element with low permanent deformation which provides good sealing performance. Three compact and small seal edges ensure perfect fluid control. Two anti-extrusion rings with stabilisers avoid the rotation of the rubber element.

The **special geometry** of the seals ensures that the pressure pre-loads the energising element without any risk of extrusion.

Operating conditions	**see page 8**
Pressure	≤ 40 MPa
Temperature	-40°C to 110°C
Speed	≤ 0,5 m/s
Fluids	**see pages 22-45**

Materials	**see pages 10-19**
Seal ①	NBR2475
Anti-extrusion rings ②	TPE63
Anti-extrusion rings ③	POM24

Assembly	**see pages 54-59**
On one-piece pistons	

Advantages

- Good sealing effect
- Excellent extrusion resistance
- Excellent wear resistance
- Perfect fluid control
- Easy installation on monobloc pistons

Please contact us for applications approaching maximum values.

More information

On **www.all-tec-business.net**, click first on the reference and then on the material code to obtain the data sheet of the different materials.

ALL-TEC® SEALING SYSTEMS

D	d	L	MS	Reference
32	22	16,4	31	**10DBS 3222/AE**
40	30	16,4	39	**10DBS 4030/AE**
50	34	18,4	49	**10DBS 5034/AE**
60	44	18,4	58,7	**10DBS 6044/AE**
63	47	18,4	61,7	**10DBS 6347/AE**
70	50	22,4	68,4	**10DBS 7050/AE**
75	55	22,4	73,4	**10DBS 7555/AE**
80	60	22,4	78,4	**10DBS 8060/AE**
85	65	22,4	83,4	**10DBS 8565/AE**
105	80	22,4	103	**10DBS 10580/AE**
150	125	25,4	147,5	**10DBS 150125/AE**

For special requirements (fluid, temperature, pressure, speed...) or applications approaching maximum values, please contact us. Other materials available: **FPM**, **HNBR**, **TNBR**, **EPDM**...

10DBS../AE seals with diameters between 20 and 1500 mm can be manufactured within short delivery time.
For prices and availability: **www.all-tec-business.net**

Fabric double acting piston seal with back-up rings

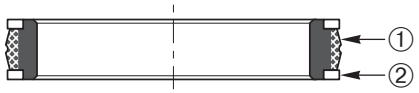

10DPC.../NEO

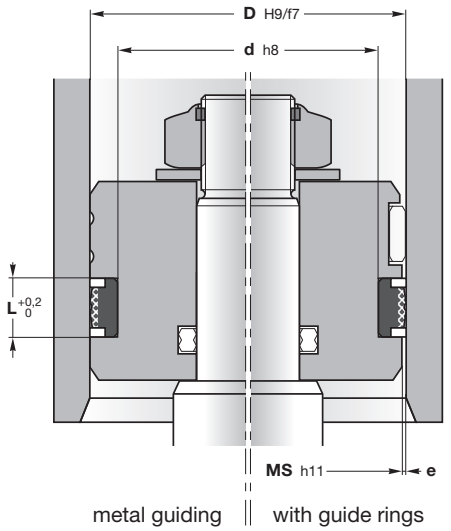

MS = D - 2e

Machining of housings: see pages 48-49

D	26 MPa	32 MPa	40 MPa	50 MPa
	e (mm)			
≤ 80	0,6	0,55	0,45	0,35
> 80	0,65	0,6	0,5	0,4

10DPC.../NEO is a double acting seal composed of a sealing rubber reinforced element and two back-up rings.

The dynamic side of the rubber part is fabric reinforced. Fabric reinforced nitrile elastomer has a higher mechanical strength and better lubricating properties.

Operating conditions	**see page 8**
Pressure	≤ 50 MPa
Temperature	-30°C to 100°C
Speed	≤ 0,5 m/s
Fluids	**see pages 22-45**

Materials	**see pages 10-19**
Seal ①	NBR fabric/NBR
Anti-extrusion rings ②	Acetal resin

Assembly	**see pages 54-59**
On one-piece pistons	

Advantages

- Efficient sealing effect at high and low pressure
- Good dynamic and static friction behavior
- Low friction
- High pressure
- Improved abrasion resistance

Please contact us for applications approaching maximum values.

More information

On **www.all-tec-business.net**, click first on the reference and then on the material code to obtain the data sheet of the different materials.

For special requirements (fluid, temperature, pressure, speed...) or applications approaching maximum values, please contact us. Other materials available: **FPM**, **HNBR**, **TNBR**, **EPDM**...

D	d	L	Reference
50	38	14,5	**10DPC 5038/NEO**
63	51	14,5	**10DPC 6351/NEO**
80	66	16,5	**10DPC 8066/NEO**
90	76	16,5	**10DPC 9076/NEO**
100	86	16,5	**10DPC 10086/NEO**
110	95	15,5	**10DPC 11095/NEO**
120	105	15,5	**10DPC 120105/NEO**
130	113	20,5	**10DPC 130113/NEO**
130	115	16	**10DPC 130115/NEO**
140	125	15,9	**10DPC 140125/NEO**
200	180	15,5	**10DPC 200180/NEO**
225	205	24,5	**10DPC 225205/NEO**
250	230	25,5	**10DPC 250230/NEO**
280	255	24,8	**10DPC 280255/NEO**

10DPC../NEO seals with diameters between 20 and 1500 mm can be manufactured within short delivery time.
For prices and availability: **www.all-tec-business.net**

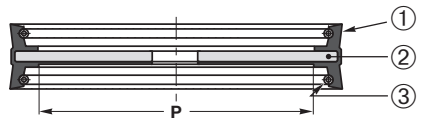

10TDO

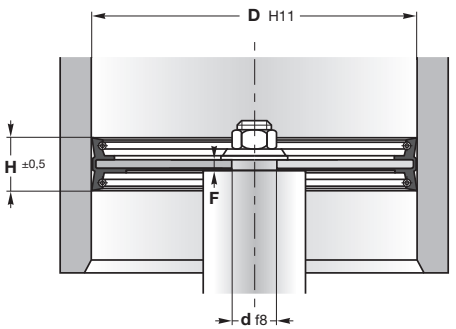

Machining of housings: see pages 48-49

10TDO is a complete piston with steel base plate and vulcanised, springloaded sealing lips.

The complete piston is for low duty applications, preferably for spare parts requirement.

The seal can only absorb **low lateral** forces.

Operating conditions	**see page 8**
Pressure	≤ 4 MPa
Temperature	-30°C to 100°C
Speed	≤ 0,5 m/s
Fluids	**see pages 22-45**

Materials	**see pages 10-19**
Seal ①	NBR0083 with carbon steel inside
Core ②	Steel
Spring (2 x) ③	Steel

Assembly — **see pages 54-59**

Mounted with rubber side towards the rod and fixed with screw and washer

Advantages

Complete piston for lox duty applications

Please contact us for applications approaching maximum values.

More information

On **www.all-tec-business.net**, click first on the reference and then on the material code to obtain the data sheet of the different materials.

ALL-TEC® SEALING SYSTEMS

D	d	P	H	F	Reference
26	8,2	15	22	3	**10TDO 026**
30	8,2	16	22	3	**10TDO 030**
35	8,2	20	26	3	**10TDO 035**
40	10,2	20	22	3	**10TDO 040**
45	10,2	22	25	4	**10TDO 045**
50	10,2	27	25	4	**10TDO 050**
55	10,2	32	25	4	**10TDO 055**
60	12,2	37	26	4	**10TDO 060**
63	12,2	40	25	4	**10TDO 063**
70	12,2	44	30	5	**10TDO 070**
80	12,2	54	30	5	**10TDO 080**
100	12,2	72	35	6	**10TDO 100**
110	12,2	78	40	6	**10TDO 110**
115	20,2	83	30	8	**10TDO 115**
125	20,2	85	40	8	**10TDO 125**
140	20,2	100	40	10	**10TDO 140**
150	20,2	105	40	10	**10TDO 150**
160	20,2	115	40	10	**10TDO 160**
180	20,2	130	40	10	**10TDO 180**
200	20,2	146	40	10	**10TDO 200**
250	30,2	200	40	12	**10TDO 250**
300	35,2	250	40	12	**10TDO 300**

For special requirements (fluid, temperature, pressure, speed...) or applications approaching maximum values, please contact us. Other materials available: **FPM**, **HNBR**, **TNBR**, **EPDM**...

10TDO seals with diameters between 20 and 1500 mm can be manufactured within short delivery time.
For prices and availability: **www.all-tec-business.net**

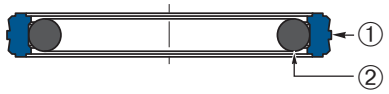

10GPS
10GPS.../LP

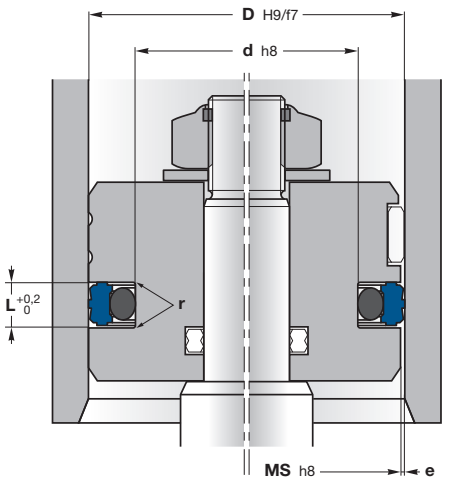

metal guiding ‖ with guide rings

MS = D - 2e

Machining of housings: see pages 48-49

L (mm)	e (mm)	
	10GPS	10GPS.../LP
2,2	≤ 0,2	≤ 0,15
3,2	≤ 0,25	≤ 0,2
4,2	≤ 0,25	≤ 0,2
6,3	≤ 0,3	≤ 0,25
8,1	≤ 0,3	≤ 0,25

10GPS seal is designed with a seal edge profile. Two external seal edges act as primary seal for pressures from both sides and prevent any build-up of hydrodynamic pressure over the seal profile and the risk of the blow-by effect.

The central sealing and supporting bulge increases the sealing effect.

Sides grooves ensure that the pressure pre-loads the energising element in all work conditions.

Operating conditions — see page 8

Pressure	
10GPS	≤ 40 MPa
10GPS.../LP	≤ 25 MPa
Temperature	-30°C to 100°C
Speed	≤ 0,5 m/s
Fluids	**see pages 22-45**

Materials — see pages 10-19

Dynamic sealing element ①	
10GPS	PU24, PU25 or PU38
10GPS.../LP	PU09 or Z20
Energising element ②	NBR 70 Sh A

Assembly — see pages 54-59

On one-piece pistons

Advantages

Efficient sealing
Excellent abrasion resistance
Easy installation on monobloc pistons
Small sections

Please contact us for applications approaching maximum values.

More information

On **www.all-tec-business.net**, click first on the reference and then on the material code to obtain the data sheet of the different materials.

For special requirements (fluid, temperature, pressure, speed...) or applications approaching maximum values, please contact us. Other materials available: **FPM**, **HNBR**, **TNBR**, **EPDM**...

D	d	L	r	ISO 7425/1	Reference
12	7,1	2,2	0,2		**10GPS 12/LP**
15	7,5	3,2	0,2		**10GPS 15**
16	8,5	3,2	0,2	•	**10GPS 16**
20	12,5	3,2	0,2	•	**10GPS 20**
22	14,5	3,2	0,2		**10GPS 22**
24	16,5	3,2	0,2		**10GPS 24/LP**
25	14	4,2	0,4	•	**10GPS 25**
25	17,5	3,2	0,2	•	**10GPS 25/1**
30	22,5	3,2	0,2	•	**10GPS 30**
32	21	4,2	0,4	•	**10GPS 32**
32	24,5	3,2	0,2	•	**10GPS 32/1**
34	26,5	3,2	0,2		**10GPS 34/LP**
35	24	4,2	0,4		**10GPS 35/1/LP**
35	27,5	3,2	0,2		**10GPS 35**
36	25	4,2	0,4		**10GPS 36/1/LP**
36	28,5	3,2	0,2		**10GPS 36/LP**
38	30,5	3,2	0,2		**10GPS 38/LP**
40	24,5	6,3	0,5		**10GPS 40**
40	29	4,2	0,4	•	**10GPS 40/1**
40	29	4,2	0,4	•	**10GPS 40/1/LP**
40	32,5	3,2	0,2		**10GPS 40/2**
42	31	4,2	0,4		**10GPS 42/LP**
45	29,5	6,3	0,5		**10GPS 45**
45	29,5	6,3	0,5		**10GPS 45/LP**
45	34	4,2	0,4		**10GPS 45/1**
48	37	4,2	0,4		**10GPS 48/LP**
49	38	4,2	0,4		**10GPS 49**
50	34,5	6,3	0,5	•	**10GPS 50**
50	39	4,2	0,4	•	**10GPS 50/1**
50	39	4,2	0,4	•	**10GPS 50/1/LP**
50,8	39,8	4,2	0,4		**10GPS 50.8/LP**
52	36,5	6,3	0,5		**10GPS 52**
54	43	4,2	0,4		**10GPS 54**
55	39,5	6,3	0,5		**10GPS 55**
55	44	4,2	0,4		**10GPS 55/1**
56	45	4,2	0,4		**10GPS 56/LP**
57	46	4,2	0,4		**10GPS 57/LP**
60	44,5	6,3	0,5		**10GPS 60**
60	49	4,2	0,4		**10GPS 60/1**

D	d	L	r	ISO 7425/1	Reference
63	47,5	6,3	0,5	•	**10GPS 63**
63	52	4,2	0,4	•	**10GPS 63/1**
63,5	52,5	4,2	0,4		**10GPS 63.5/LP**
65	49,5	6,3	0,5		**10GPS 65**
65	54	4,2	0,4		**10GPS 65/1**
65	54	4,2	0,4		**10GPS 65/1/LP**
70	54,5	6,3	0,5		**10GPS 70**
70	54,5	6,3	0,5		**10GPS 70/LP**
70	59	4,2	0,4		**10GPS 70/1**
72	61	4,2	0,4		**10GPS 72/LP**
74	58,5	6,3	0,5		**10GPS 74/LP**
75	59,5	6,3	0,5		**10GPS 75**
75	64	4,2	0,4		**10GPS 75/1**
76,5	65,5	4,2	0,4		**10GPS 76.5/LP**
80	64,5	6,3	0,5	•	**10GPS 80**
80	64,5	6,3	0,5	•	**10GPS 80/LP**
80	69	4,2	0,4	•	**10GPS 80/1**
85	69,5	6,3	0,5		**10GPS 85**
88,9	73,4	6,3	0,5		**10GPS 88.9/LP**
90	69	8,1	0,6		**10GPS 90/1**
90	74,5	6,3	0,5		**10GPS 90**
95	79,5	6,3	0,5		**10GPS 95**
100	84,5	6,3	0,5	•	**10GPS 100**
100	84,5	6,3	0,5	•	**10GPS 100/LP**
101,6	86,1	6,3	0,5		**10GPS 101.6/LP**
105	89,5	6,3	0,5		**10GPS 105**
110	94,5	6,3	0,5		**10GPS 110**
115	94	8,1	0,6		**10GPS 115/1**
115	99,5	6,3	0,5		**10GPS 115**
118	102,5	6,3	0,5		**10GPS 118/LP**
120	104,5	6,3	0,5		**10GPS 120**
125	104	8,1	0,6		**10GPS 125/1/LP**
125	109,5	6,3	0,5	•	**10GPS 125**
127	111,5	6,3	0,5		**10GPS 127/LP**
130	109	8,1	0,6		**10GPS 130/1/LP**
130	114,5	6,3	0,5		**10GPS 130**
135	114	8,1	0,6		**10GPS 135/LP**
135	119,5	6,3	0,5		**10GPS 135/1/LP**
140	119	8,1	0,6		**10GPS 140**

10GPS and 10GPS.../LP seals with diameters between 20 and 1500 mm can be manufactured within short delivery time.
For prices and availability: **www.all-tec-business.net**

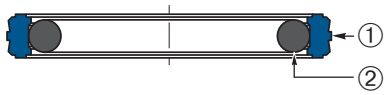

10GPS
10GPS.../LP

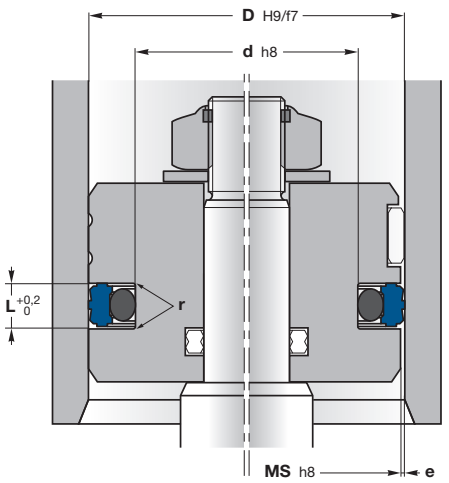

metal guiding | with guide rings

MS = D - 2e

Machining of housings: see pages 48-49

L (mm)	e (mm)	
	10GPS	10GPS.../LP
2,2	≤ 0,2	≤ 0,15
3,2	≤ 0,25	≤ 0,2
4,2	≤ 0,25	≤ 0,2
6,3	≤ 0,3	≤ 0,25
8,1	≤ 0,3	≤ 0,25

10GPS seal is designed with a seal edge profile. Two external seal edges act as primary seal for pressures from both sides and prevent any build-up of hydrodynamic pressure over the seal profile and the risk of the blow-by effect.

The central sealing and supporting bulge increases the sealing effect.

Sides grooves ensure that the pressure pre-loads the energising element in all work conditions.

Operating conditions — see page 8

Pressure	
10GPS	≤ 40 MPa
10GPS.../LP	≤ 25 MPa
Temperature	-30°C to 100°C
Speed	≤ 0,5 m/s
Fluids	**see pages 22-45**

Materials — see pages 10-19

Dynamic sealing element ①	
10GPS	PU24, PU25 or PU38
10GPS.../LP	PU09 or Z20
Energising element ②	NBR 70 Sh A

Assembly — see pages 54-59

On one-piece pistons

Advantages

- Efficient sealing
- Excellent abrasion resistance
- Easy installation on monobloc pistons
- Small sections

Please contact us for applications approaching maximum values.

More information

On **www.all-tec-business.net**, click first on the reference and then on the material code to obtain the data sheet of the different materials.

For special requirements (fluid, temperature, pressure, speed...) or applications approaching maximum values, please contact us. Other materials available: **FPM**, **HNBR**, **TNBR**, **EPDM**...

D	d	L	r	ISO 7425/1	Reference
140	124,5	6,3	0,5		**10GPS 140/1**
150	129	8,1	0,6		**10GPS 150**
152,4	131,4	8,1	0,6		**10GPS 152.4/LP**
160	139	8,1	0,6	•	**10GPS 160**
170	149	8,1	0,6		**10GPS 170**
180	159	8,1	0,6		**10GPS 180**
185	164	8,1	0,6		**10GPS 185/LP**
190	169	8,1	0,6		**10GPS 190**
200	179	8,1	0,6	•	**10GPS 200**
210	189	8,1	0,6		**10GPS 210/LP**
220	199	8,1	0,6		**10GPS 220/LP**
220	199	8,1	0,6		**10GPS 220**
230	209	8,1	0,6		**10GPS 230**
250	229	8,1	0,6	•	**10GPS 250**

10GPS and 10GPS.../LP seals with diameters between 20 and 1500 mm can be manufactured within short delivery time.
For prices and availability: **www.all-tec-business.net**

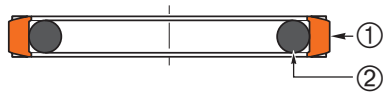

10E/GH

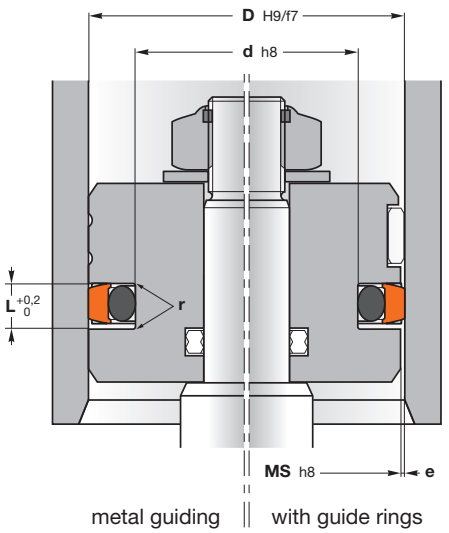

metal guiding ‖ with guide rings

MS = D - 2e

Machining of housings: see pages 48-49

Pressure	10 MPa	20 MPa	30 MPa	40 MPa
L (mm)	**e** (mm)			
2,2	0,35	0,23	0,18	0,15
3,2	0,4	0,25	0,2	0,15
4,2	0,4	0,25	0,2	0,18
6,3	0,45	0,28	0,23	0,18
8,1	0,55	0,35	0,25	0,2
> 40 MPa => **e** = H8/f8				

10E/GH has a dynamic seal element that, due to the special design, improves the pressure distribution and drastically reduces the friction. It is made of a special high resistance polymer.

It increases the performance and service life in applications where properties such as **abrasion resistance** and **tear strength** are critical. Conical shaped notches allow the seal to energise without risk of extrusion of O-ring.

A standard size O-ring with low permanent deformation is the energising component on the static side.

Operating conditions	**see page 8**
Pressure	≤ 50 MPa
Temperature	-30°C to 100°C
Speed	≤ 0,5 m/s
Fluids	**see pages 22-45**

Materials	**see pages 10-19**
Dynamic sealing element ①	TPE
Energising element ②	NBR 70 Sh A

Assembly	**see pages 54-59**
On one-piece pistons	

Advantages

- Easy installation on a solid piston
- Returns to the size immediately after assembly
- Low friction and no tendency of stick-slip
- Simple groove design and space-saving construction
- Excellent wear-resistance
- High resistance against extrusion
- Extended service life

Please contact us for applications approaching maximum values.

More information

On **www.all-tec-business.net**, click first on the reference and then on the material code to obtain the data sheet of the different materials.

For special requirements (fluid, temperature, pressure, speed...) or applications approaching maximum values, please contact us. Other materials available: **FPM**, **HNBR**, **TNBR**, **EPDM**...

D	d	L	ISO 7425/1	Reference
12	7,1	2,2	•	**10E/GH 12**
17	12,1	2,2		**10E/GH 17**
20	12,5	3,2	•	**10E/GH 20**
25	17,5	3,2	•	**10E/GH 25**
28	20,5	3,2		**10E/GH 28**
30	22,5	3,2		**10E/GH 30**
32	24,5	3,2	•	**10E/GH 32**
35	27,5	3,2		**10E/GH 35**
40	29	4,2	•	**10E/GH 40/1**
	32,5	3,2	•	**10E/GH 40**
45	34	4,2		**10E/GH 45**
48	37	4,2		**10E/GH 48**
50	34,5	6,3	•	**10E/GH 50/1**
	39	4,2	•	**10E/GH 50**

D	d	L	ISO 7425/1	Reference
55	44	4,2		**10E/GH 55**
60	44,5	6,3		**10E/GH 60/1**
	49	4,2		**10E/GH 60**
63	47,5	6,3	•	**10E/GH 63/1**
	52	4,2	•	**10E/GH 63**
65	49,5	6,3		**10E/GH 65**
	52,0	6,3		**10E/GH 65/1**
70	59	4,2		**10E/GH 70**
75	64	4,2		**10E/GH 75**
80	64,5	6,3	•	**10E/GH 80**
90	74,5	6,3		**10E/GH 90**
95	79,5	6,3		**10E/GH 95**
100	84,5	6,3	•	**10E/GH 100**
140	127,6	5,5		**10E/GH 140**

10E/GH seals with diameters between 20 and 300 mm can be manufactured within short delivery time.
For prices and availability: **www.all-tec-business.net**

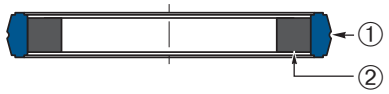

10GPSK

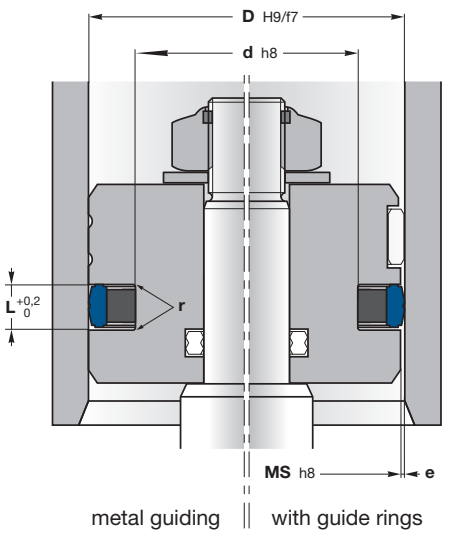

MS = D - 2e

Machining of housings: see pages 48-49

Pressure	16 MPa	25 MPa	32 MPa	40 MPa
L (mm)	**e** (mm)			
4,2	≤ 0,4	≤ 0,3	≤ 0,2	
6,3	≤ 0,5	≤ 0,4	≤ 0,3	≤ 0,25
8,1	≤ 0,6	≤ 0,5	≤ 0,4	≤ 0,35

10GPSK is a two-piece compact seal consisting of one profile ring with pronounced sealing edge and one energising element for producing the pre-load.

Sides grooves ensure that the pressure pre-loads the energising element in all work conditions.

Operating conditions	see page 8
Pressure	≤ 40 MPa
Temperature	-30°C to 100°C
Speed	≤ 0,5 m/s
Fluids	see pages 22-45

Materials	see pages 10-19
Sealing element ① / Energising element ②	PU25 / NBR3473 PU35 / NBR1680 PU38 / NBR8480

Assembly	see pages 54-59
On one-piece pistons	

Advantages

- Efficient sealing
- Excellent abrasion resistance
- Easy installation on monobloc pistons
- Small sections

Please contact us for applications approaching maximum values.

More information

On **www.all-tec-business.net**, click first on the reference and then on the material code to obtain the data sheet of the different materials.

For special requirements (fluid, temperature, pressure, speed...) or applications approaching maximum values, please contact us. Other materials available: **FPM**, **HNBR**, **TNBR**, **EPDM**...

D	d	L	r	ISO 7425/1	Reference
20	12,5	3,2	0,2	•	**10GPSK 20**
25	17,5	3,2	0,2	•	**10GPSK 25**
30	22,5	3,2	0,2		**10GPSK 30**
32	24,5	3,2	0,2	•	**10GPSK 32**
40	24,5	6,3	0,4	•	**10GPSK 40**
	29	4,2	0,3	•	**10GPSK 40/1**
45	34	4,2	0,3		**10GPSK 45/1**
50	34,5	6,3	0,4	•	**10GPSK 50**
	39	4,2	0,3	•	**10GPSK 50/1**
55	39,5	6,3	0,4		**10GPSK 55**
	44	4,2	0,3		**10GPSK 55/1**
60	44,5	6,3	0,4		**10GPSK 60**
	49	4,2	0,3		**10GPSK 60/1**
63	47,5	6,3	0,4	•	**10GPSK 63**
	52	4,2	0,3	•	**10GPSK 63/1**
65	49,5	6,3	0,4		**10GPSK 65**
	52	6,3	0,4		**10GPSK 65/1**
	54	4,2	0,3		**10GPSK 65/2**
70	54,5	6,3	0,4		**10GPSK 70**
	57	6,3	0,4		**10GPSK 70/2**
	59	4,2	0,3		**10GPSK 70/1**
75	59,5	6,3	0,4		**10GPSK 75**
80	59	8,1	0,4		**10GPSK 80/1**
	59	10,5	0,4		**10GPSK 80/2**
	64,5	6,3	0,4	•	**10GPSK 80**

D	d	L	r	ISO 7425/1	Reference
85	69,5	6,3	0,4		**10GPSK 85**
	71,5	6,3	0,4		**10GPSK 85/1**
90	69	8,1	0,4		**10GPSK 90/1**
	74,5	6,3	0,4		**10GPSK 90**
	69	10,5	0,4		**10GPSK 90/2**
95	79,5	6,3	0,4		**10GPSK 95**
100	79	8,1	0,4		**10GPSK 100/1**
	84,5	6,3	0,4	•	**10GPSK 100**
105	89,5	6,3	0,4		**10GPSK 105**
110	89	8,1	0,4		**10GPSK 110/1**
	89	10,5	0,4		**10GPSK 110/2**
	94,5	6,3	0,4		**10GPSK 110**
115	94	8,1	0,4		**10GPSK 115/1**
120	99	8,1	0,4		**10GPSK 120/1**
	99	10,5	0,4		**10GPSK 120/2**
	104,5	6,3	0,4		**10GPSK 120**
125	104	8,1	0,4	•	**10GPSK 125/1**
	104	10,5	0,4		**10GPSK 125/2**
	109,5	6,3	0,4	•	**10GPSK 125**
130	109	8,1	0,4		**10GPSK 130/1**
140	119	8,1	0,4		**10GPSK 140**
	119	10,5	0,4		**10GPSK 140/1**
150	129	8,1	0,4		**10GPSK 150/1**
	129	10,5	0,4		**10GPSK 150**
160	139	8,1	0,4	•	**10GPSK 160**
180	159	8,1	0,4		**10GPSK 180**
200	175	12,5	0,4		**10GPSK 200**
	179	8,1	0,4	•	**10GPSK 200/1**

10GPSK seals with diameters between 20 and 1500 mm can be manufactured within short delivery time.
For prices and availability: **www.all-tec-business.net**

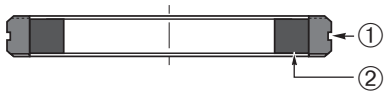

10EPK

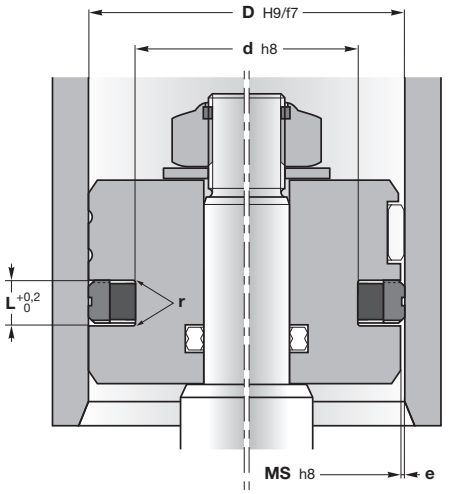

metal guiding || with guide rings

MS = D - 2e

Machining of housings: see pages 48-49

Pressure	16 MPa	25 MPa	32 MPa	40 MPa
L (mm)	**e** (mm)			
3,2	≤ 0,3	≤ 0,2		
4,2	≤ 0,4	≤ 0,3	≤ 0,2	
6,3	≤ 0,5	≤ 0,4	≤ 0,3	≤ 0,25
8,1	≤ 0,6	≤ 0,5	≤ 0,4	≤ 0,35

10EPK seal piston ring was developed specifically to be totally interchangeable with the PTFE piston rings. It's a product which can be more readily installed on the pistons and provide longer field service life.

The dynamic surface of the piston ring is **impregnated with molybdenum disulfide** (MoS_2) to reduce the friction.

Radial notches on both sides of the seal ensure a fast **energising** of the sealing element.

Operating conditions	**see page 8**
Pressure	≤ 40 MPa
Temperature	-30°C to 100°C
Speed	≤ 0,5 m/s
Fluids	**see pages 22-45**

Materials	**see pages 10-19**
Dynamic sealing element ①	PU29 + MoS_2
Energising element ②	NBR1970

Assembly	**see pages 54-59**
On one-piece pistons	

Advantages

- Small sections
- High extrusion resistance
- Easy installation on monobloc pistons
- Excellent abrasion resistance and long service life
- Low break-out and running friction

Please contact us for applications approaching maximum values.

More information

On **www.all-tec-business.net**, click first on the reference and then on the material code to obtain the data sheet of the different materials.

For special requirements (fluid, temperature, pressure, speed...) or applications approaching maximum values, please contact us. Other materials available: **FPM**, **HNBR**, **TNBR**, **EPDM**...

D	d	L	r	ISO 7425/1	Reference
25	17,5	3,2	0,2	•	**10EPK 25**
32	24,5	3,2	0,2	•	**10EPK 32**
40	29	4,2	0,3	•	**10EPK 40**
45	34	4,2	0,3		**10EPK 45**
50	39	4,2	0,3	•	**10EPK 50**
	34,5	6,3	0,4	•	**10EPK 50/1**
	37	6,3	0,4		**10EPK 50/2**
55	44	4,2	0,3		**10EPK 55**
60	49	4,2	0,3		**10EPK 60**
	44,5	6,3	0,4		**10EPK 60/1**
63	52	4,2	0,3	•	**10EPK 63**
	50	6,3	0,4		**10EPK 63/2**
65	54	4,2	0,3		**10EPK 65**
70	59	4,2	0,3		**10EPK 70**
	54,5	6,3	0,4		**10EPK 70/1**
	57	6,3	0,4		**10EPK 70/2**
75	64	4,2	0,3		**10EPK 75**
80	64,5	6,3	0,4	•	**10EPK 80**
85	69,5	6,3	0,4		**10EPK 85**
90	74,5	6,3	0,4		**10EPK 90**
95	79,5	6,3	0,4		**10EPK 95**
100	84,5	6,3	0,4	•	**10EPK 100**
	79	8,1	0,4		**10EPK 100/1**

D	d	L	r	ISO 7425/1	Reference
105	89,5	6,3	0,4		**10EPK 105**
110	94,5	6,3	0,4		**10EPK 110**
115	99,5	6,3	0,4		**10EPK 115**
120	104,5	6,3	0,4		**10EPK 120**
125	109,5	6,3	0,4	•	**10EPK 125**
130	114,5	6,3	0,4		**10EPK 130**
	109	8,1	0,4		**10EPK 130/1**
135	114	8,1	0,4		**10EPK 135**
140	119	8,1	0,4		**10EPK 140**
145	124	8,1	0,4		**10EPK 145**
150	129	8,1	0,4		**10EPK 150**
155	134	8,1	0,4		**10EPK 155**
160	139	8,1	0,4	•	**10EPK 160**
	144,5	6,3	0,4		**10EPK 160/1**
170	149	8,1	0,4		**10EPK 170**
180	159	8,1	0,4		**10EPK 180**
190	169	8,1	0,4		**10EPK 190**
200	179	8,1	0,4	•	**10EPK 200**
220	199	8,1	0,4		**10EPK 220**
250	229	8,1	0,4	•	**10EPK 250**
280	259	8,1	0,4		**10EPK 280**
320	299	8,1	0,4		**10EPK 320**

10EPK seals with diameters between 20 and 1500 mm can be manufactured within short delivery time.
For prices and availability: **www.all-tec-business.net**

Heavy duty piston seal
Z-cutted

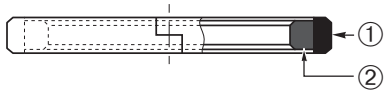

10GPK

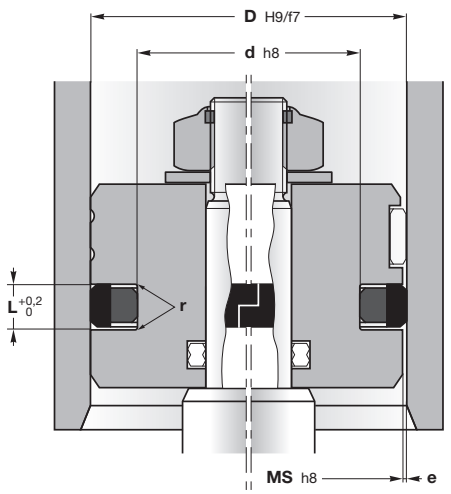

metal guiding || with guide rings

MS = D - 2e

Machining of housings: see pages 48-49

Pressure	0-20 MPa	20-50 MPa	50-80 MPa
L (mm)	**e** (mm)		
4,2	≤ 0,5	≤ 0,35	H8/f7
6,3	≤ 0,7	≤ 0,5	
8,1	≤ 0,8	≤ 0,6	

10GPK double acting piston seal is designed for heavy duty applications.

It's easily assembled thanks to the Z-cutted sealing ring.

The **10GPK** has very high extrusion resistance and bigger extrusion gaps are possible compared with PTFE rings.

Operating conditions	**see page 8**
Pressure	≤ 80 MPa
Temperature	-30°C to 100°C
Speed	≤ 1 m/s
Fluids	**see pages 22-45**

Materials	**see pages 10-19**
Dynamic sealing element ①	PA + glass fibers
Energising element ②	NBR

Assembly	**see pages 54-59**
On one-piece pistons	

Advantages

- Small sections
- Very high extrusion resistance
- Easy installation on monobloc pistons without tools
- Excellent abrasion resistance and long service life
- Low break-out and running friction
- Resistent against shock loads

Please contact us for applications approaching maximum values.

More information

On **www.all-tec-business.net**, click first on the reference and then on the material code to obtain the data sheet of the different materials.

For special requirements (fluid, temperature, pressure, speed...) or applications approaching maximum values, please contact us. Other materials available: **FPM**, **HNBR**, **TNBR**, **EPDM**...

D	d	L	r	ISO 7425/1	Reference
40	29	4,2	0,3	•	**10GPK 40**
45	34	4,2	0,3		**10GPK 45**
50	39	4,2	0,3	•	**10GPK 50**
	34,5	6,3	0,4	•	**10GPK 50/1**
60	49	4,2	0,3		**10GPK 60**
63	47,5	6,3	0,4	•	**10GPK 63**
	52	4,2	0,3	•	**10GPK 63/1**
70	54,5	6,3	0,4		**10GPK 70/1**
	59	4,2	0,3		**10GPK 70**
75	54	8,1	0,4		**10GPK 75/2**
	59	4,2	0,3		**10GPK 70**
80	59	8,1	0,4		**10GPK 80/1**
	64,5	6,3	0,4	•	**10GPK 80**
	69	4,2	0,3	•	**10GPK 80/2**
90	69	8,1	0,4		**10GPK 90/1**
	74,5	6,3	0,4		**10GPK 90**
95	74	8,1	0,4		**10GPK 95/1**
100	79	8,1	0,4		**10GPK 100/1**
	84,5	6,3	0,4	•	**10GPK 100**
	89	4,2	0,3		**10GPK 100/2**
105	84	8,1	0,4		**10GPK 105/1**
110	89	8,1	0,4		**10GPK 110/1**
	94,5	6,3	0,4		**10GPK 110**
115	94	8,1	0,4		**10GPK 115/1**
120	99	8,1	0,4		**10GPK 120/1**
	104,5	6,3	0,4		**10GPK 120**
	109	4,2	0,3		**10GPK 120/2**
125	104	8,1	0,4	•	**10GPK 125/1**
	109,5	6,3	0,4	•	**10GPK 125**
	114	4,2	0,3		**10GPK 125/2**
127	112,7	7,14	0,4		**10GPK 127**

D	d	L	r	ISO 7425/1	Reference
130	109	8,1	0,4		**10GPK 130/1**
	114,5	6,3	0,4		**10GPK 130**
135	114	8,1	0,4		**10GPK 135**
140	119	8,1	0,4		**10GPK 140**
	129	4,2	0,3		**10GPK 140/2**
145	124	8,1	0,4		**10GPK 145**
150	129	8,1	0,4		**10GPK 150**
	130,12	9,6	0,4		**10GPK 150/1**
160	139	8,1	0,4	•	**10GPK 160**
	140,12	9,6	0,4		**10GPK 160/1**
165	144	8,1	0,4		**10GPK 165**
170	149	8,1	0,4		**10GPK 170**
	150,12	9,6	0,4		**10GPK 170/1**
175	154	8,1	0,4		**10GPK 175**
180	159	8,1	0,4		**10GPK 180**
190	169	8,1	0,4		**10GPK 190**
200	179	8,1	0,4	•	**10GPK 200**
210	189	8,1	0,4		**10GPK 210**
215	194	8,1	0,4		**10GPK 215**
220	199	8,1	0,4		**10GPK 220**
225	204	8,1	0,4		**10GPK 225**
230	209	8,1	0,4		**10GPK 230**
240	219	8,1	0,4		**10GPK 240**
250	229	8,1	0,4	•	**10GPK 250**
260	239	8,1	0,4		**10GPK 260**
280	255,5	8,1	0,4		**10GPK 280**
320	292	9,5	0,4	•	**10GPK 320**

10GPK seals with diameters between 20 and 1500 mm can be manufactured within short delivery time.
For prices and availability: **www.all-tec-business.net**

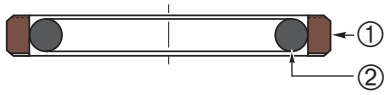

10E/GR...A

Example of item code

10E/GR 0800 A - 55/4470

All-Tec code | Diameter D (mm x 10) | Profile | Material ①/②

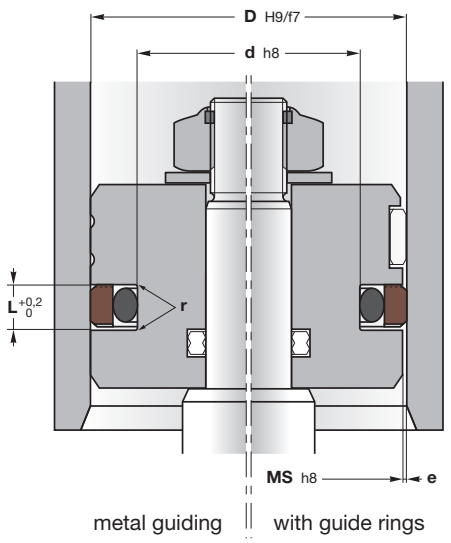

MS = D - 2e

Machining of housings: see pages 48-49

More information

On **www.all-tec-business.net**, click first on the reference and then on the material code to obtain the data sheet of the different materials.

10E/GR...A piston seal is a bi-directional piston seal for use in low to medium duty hydraulic systems.

The dynamic seal element offers exceptional low friction, high speed performances and high chemical compatibility. Side grooves ensure that pressure loads the energising component in all work conditions.

The seal is **commonly used** in applications such as mobile hydraulics, machine tools, injection moulding machines and hydraulic presses.

Radial notches on both sides of the seal ensure a fast **energising** of the sealing element.

Operating conditions	**see page 8**
Pressure	≤ 50 MPa
Temperature	-30°C to 100°C
Speed	≤ 15 m/s
Fluids	**see pages 22-45**

Materials	**see pages 10-19**
Dynamic sealing element ①	
10E/GR...A	PT55
10E/GR...A	PT15
15E/GR...A	PT53
Energising element ②	NBR 70 Sh A

Assembly	**see pages 54-59**
On one-piece pistons	

Advantages

- Small sections and simple groove design
- High extrusion resistance and long service life
- Low break-out and running friction
- Compatibility with nearly all media due to the high chemical resistance of the sealing element and the wide selection of O-ring compounds
- No stick-slip

Please contact us for applications approaching maximum values.

D (mm) 10E/GR Standard serie	D (mm) 10E/GR-L Light serie	D (mm) 10E/GR-P Heavy serie	r (mm)	L (mm)	d (mm)	e (mm) 0-10 MPa	e (mm) 10-20 MPa	e (mm) 20-40 MPa	e (mm) 40-50 MPa	O-ring ②
8→14,9	15→39,9		0,4	2,2	**D** - 4,9	≤ 0,3	≤ 0,2	≤ 0,15	H8/f8	1,78
15→39,9	40→79,9		0,6	3,2	**D** - 7,3	≤ 0,4	≤ 0,25	≤ 0,15		2,62
40→79,9	80→132,9	15→39,9	1	4,2	**D** - 11	≤ 0,4	≤ 0,25	≤ 0,2		3,53
80→132,9	133→329,9	40→79,9	1,3	6,3	**D** - 15,5	≤ 0,5	≤ 0,3	≤ 0,2		5,34
133→329,9	330→669,9	80→132,9	1,8	8,1	**D** - 21	≤ 0,6	≤ 0,35	≤ 0,25		7
330→669,9	670→999,9	133→329,9	1,8	8,1	**D** - 24,5	≤ 0,7	≤ 0,5	≤ 0,3		7
670→999,9		330→669,9	2,5	9,5	**D** - 28					8,4
≥ 1000			3	13,8	**D** - 38					12

For special requirements (fluid, temperature, pressure, speed...) or applications approaching maximum values, please contact us. Other materials available: **FPM**, **HNBR**, **TNBR**, **EPDM**...

10E/GRINCH...A: Inch dimensions page 467

10E/GR-L: Light serie
10E/GR-P: Heavy serie

D	d	L	O-ring NBR 70 Sh A	Alternative reference	Reference
10	5,1	2,2	4,76 x 1,78		**10E/GR 0100A-55/4470**
12	7,1	2,2	6,75 x 1,78		**10E/GR 0120A-55/4470**
13	8,1	2,2	7,94 x 1,78		**10E/GR 0130A-55/4470**
14	9,1	2,2	8,73 x 1,78		**10E/GR 0140A-55/4470**
15	7,5	3,2	7,59 x 2,62		**10E/GR 0150A-55/4470**
	10,1	2,2	9,52 x 1,78		**10E/GR-L 0150A-55/4470**
16	8,5	3,2	7,59 x 2,62		**10E/GR 0160A-55/4470**
18	10,5	3,2	9,19 x 2,62		**10E/GR 0180A-55/4470**
20	12,5	3,2	12,37 x 2,62		**10E/GR 0200A-55/4470**
	15,1	2,2	14 x 1,78		**10E/GR-L 0200A-55/4470**
22	14,5	3,2	13,94 x 2,62		**10E/GR 0220A-55/4470**
24	16,5	3,2	15,54 x 2,62		**10E/GR 0240A-55/4470**
25	14	4,2	13,87 x 3,53		**10E/GR-P 0250A-55/4470**
	17,5	3,2	17,12 x 2,62	**15E/GR 0250A**	**10E/GR 0250A-55/4470**
	20,1	2,2	18,77 x 1,78		**10E/GR-L 0250A-55/4470**
28	20,5	3,2	20,3 x 2,62		**10E/GR 0280A-55/4470**
30	22,5	3,2	21,89 x 2,62	**15E/GR 0300A**	**10E/GR 0300A-55/4470**
32	21	4,2	20,22 x 3,53		**10E/GR-P 0320A-55/4470**
	24,5	3,2	23,47 x 2,62	**15E/GR 0320A**	**10E/GR 0320A-55/4470**
	27,1	2,2	26,7 x 1,78		**10E/GR-L 0320A-55/4470**
35	27,5	3,2	26,64 x 2,62	**15E/GR 0350A**	**10E/GR 0350A-55/4470**
36	28,5	3,2	28,24 x 2,62	**15E/GR 0360A**	**10E/GR 0360A-55/4470**
38	30,5	3,2	29,82 x 2,62		**10E/GR 0380A-55/4470**
40	24,5	6,3	23,16 x 5,34		**10E/GR-P 0400A-55/4470**
	29	4,2	28,17 x 3,53	**15E/GR 0400A**	**10E/GR 0400A-55/4470**
	32,5	3,2	31,42 x 2,62		**10E/GR-L 0400A-55/4470**
42	31	4,2	29,74 x 3,53		**10E/GR 0420A-55/4470**
44	33	4,2	31,34 x 3,53		**10E/GR 0440A-55/4470**
45	34	4,2	32,92 x 3,53	**15E/GR 0450A**	**10E/GR 0450A-55/4470**
48	37	4,2	36,09 x 3,53		**10E/GR 0480A-55/4470**

10E/GR...A seals with diameters between 20 and 1500 mm can be manufactured within short delivery time.
For prices and availability: **www.all-tec-business.net**

10E/GRINCH...A: Inch dimensions page 467

10E/GR-L: Light serie
10E/GR-P: Heavy serie

D	d	L	O-ring NBR 70 Sh A	Alternative reference	Reference
50	34,5	6,3	34,29 x 5,34		**10E/GR-P 0500A-55/4470**
	39	4,2	37,69 x 3,53	**15E/GR 0500A**	**10E/GR 0500A-55/4470**
	42,5	3,2	40,94 x 2,62		**10E/GR-L 0500A-55/4470**
52	41	4,2	40,87 x 3,53		**10E/GR 0520A-55/4470**
55	44	4,2	44,04 x 3,53	**15E/GR 0550A**	**10E/GR 0550A-55/4470**
56	45	4,2	44,04 x 3,53		**10E/GR 0560A-55/4470**
60	44,5	6,3	43,82 x 5,34		**10E/GR-P 0600A-55/4470**
	49	4,2	47,22 x 3,53	**15E/GR 0600A**	**10E/GR 0600A-55/4470**
	52,5	3,2	52,07 x 2,62		**10E/GR-L 0600A-55/4470**
63	47,5	6,3	46,99 x 5,34		**10E/GR-P 0630A-55/4470**
	52	4,2	50,39 x 3,53	**15E/GR 0630A**	**10E/GR 0630A-55/4470**
	55,5	3,2	53,64 x 2,62		**10E/GR-L 0630A-55/4470**
65	49,5	6,3	46,99 x 5,34		**10E/GR-P 0650A-55/4470**
	54	4,2	53,57 x 3,53	**15E/GR 0650A**	**10E/GR 0650A-55/4470**
70	54,5	6,3	53,34 x 5,34	**15E/GR-P 0700A**	**10E/GR-P 0700A-55/4470**
	59	4,2	56,74 x 3,53	**15E/GR 0700A**	**10E/GR 0700A-55/4470**
	62,5	3,2	61,6 x 2,62		**10E/GR-L 0700A-55/4470**
75	59,5	6,3	56,52 x 5,34		**10E/GR-P 0750A-55/4470**
	64	4,2	63,09 x 3,53	**15E/GR 0750A**	**10E/GR 0750A-55/4470**
	67,5	3,2	66,34 x 2,62		**10E/GR-L 0750A-55/4470**
80	59	8,1	58 x 7	**15E/GR-P 0800A**	**10E/GR-P 0800A-55/4470**
	64,5	6,3	62,87 x 5,34	**15E/GR 0800A**	**10E/GR 0800A-55/4470**
	69	4,2	68,26 x 3,53		**10E/GR-L 0800A-55/4470**
85	69,5	6,3	69,22 x 5,34	**15E/GR 0850A**	**10E/GR 0850A-55/4470**
90	69	8,1	68 x 7	**15E/GR-P 0900A**	**10E/GR-P 0900A-55/4470**
	74,5	6,3	72,39 x 5,34		**10E/GR 0900A-15/4470**
	74,5	6,3	72,39 x 5,34	**15E/GR 0900A**	**10E/GR 0900A-55/4470**
	79	4,2	78,97 x 3,53		**10E/GR-L 0900A-55/4470**
95	79,5	6,3	78,74 x 5,34	**15E/GR 0950A**	**10E/GR 0950A-55/4470**
100	79	8,1	78 x 7	**15E/GR-P 1000A**	**10E/GR-P 1000A-55/4470**
	84,5	6,3	81,92 x 5,34	**15E/GR 1000A**	**10E/GR 1000A-55/4470**
	89	4,2	88,49 x 3,53		**10E/GR-L 1000A-55/4470**
105	84	8,1	82 x 7		**10E/GR-P 1050A-55/4470**
	89,5	6,3	88,27 x 5,34		**10E/GR 1050A-55/4470**
110	89	8,1	89 x 7	**15E/GR-P 1100A**	**10E/GR-P 1100A-55/4470**
	94,5	6,3	91,44 x 5,34	**15E/GR 1100A**	**10E/GR 1100A-55/4470**
	99	4,2	98,02 x 3,53		**10E/GR-L 1100A-55/4470**

References printed in green are manufactured with a non-standard material

For special requirements (fluid, temperature, pressure, speed...) or applications approaching maximum values, please contact us. Other materials available: **FPM**, **HNBR**, **TNBR**, **EPDM**...

10E/GRINCH...A: Inch dimensions page 467

10E/GR-L: Light serie
10E/GR-P: Heavy serie

D	d	L	O-ring NBR 70 Sh A	Alternative reference	Reference
115	94	8,1	92 x 7		**10E/GR-P 1150A-55/4470**
	99,5	6,3	97,79 x 5,34		**10E/GR 1150A-55/4470**
120	99	8,1	98 x 7	**15E/GR-P 1200A**	**10E/GR-P 1200A-55/4470**
	104,5	6,3	104,14 x 5,34	**15E/GR 1200A**	**10E/GR 1200A-55/4470**
125	104	8,1	103 x 7	**15E/GR-P 1250A**	**10E/GR-P 1250A-55/4470**
	109,5	6,3	107,32 x 5,34		**10E/GR 1250A-15/4470**
	109,5	6,3	107,32 x 5,34	**15E/GR 1250A**	**10E/GR 1250A-55/4470**
130	109	8,1	108 x 7	**15E/GR-P 1300A**	**10E/GR-P 1300A-55/4470**
	114,5	6,3	113,67 x 5,34	**15E/GR 1300A**	**10E/GR 1300A-55/4470**
135	114	8,1	113,67 x 7		**10E/GR 1350A-55/4470**
140	119	8,1	116,84 x 7		**10E/GR 1400A-15/4470**
	119	8,1	116,84 x 7	**15E/GR 1400A**	**10E/GR 1400A-55/4470**
145	124	8,1	123,19 x 7		**10E/GR 1450A-55/4470**
150	129	8,1	126,37 x 7	**15E/GR 1500A**	**10E/GR 1500A-55/4470**
155	134	8,1	132,72 x 7		**10E/GR 1550A-55/4470**
160	139	8,1	135,89 x 7		**10E/GR 1600A-15/4470**
	139	8,1	135,89 x 7	**15E/GR 1600A**	**10E/GR 1600A-55/4470**
165	144	8,1	142,24 x 7		**10E/GR 1650A-55/4470**
170	149	8,1	145,42 x 7		**10E/GR 1700A-15/4470**
	149	8,1	145,42 x 7		**10E/GR 1700A-55/4470**
175	154	8,1	151,77 x 7		**10E/GR 1750A-55/4470**
180	159	8,1	158,12 x 7	**15E/GR 1800A**	**10E/GR 1800A-55/4470**
	164,5	6,3	164,47 x 5,34		**10E/GR-L 1800A-55/4470**
190	169	8,1	164,47 x 7		**10E/GR 1900A-55/4470**
200	179	8,1	177,17 x 7	**15E/GR 2000A**	**10E/GR 2000A-55/4470**
210	189	8,1	187,3 x 7		**10E/GR 2100A-55/4470**
220	199	8,1	196,22 x 7	**15E/GR 2200A**	**10E/GR 2200A-55/4470**
225	204	8,1	202,57 x 7		**10E/GR 2250A-55/4470**
230	209	8,1	208,92 x 7		**10E/GR 2300A-55/4470**
240	219	8,1	215,27 x 7		**10E/GR 2400A-15/4470**
	219	8,1	215,27 x 7		**10E/GR 2400A-55/4470**

References printed in green are manufactured with a non-standard material

10E/GR...A seals with diameters between 20 and 1500 mm can be manufactured within short delivery time.
For prices and availability: **www.all-tec-business.net**

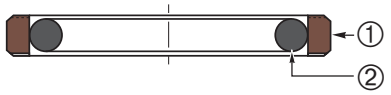

10E/GR...A

Example of item code

10E/GR 0800 A - 55/4470

All-Tec code | Diameter D (mm x 10) | Profile | Material ①/②

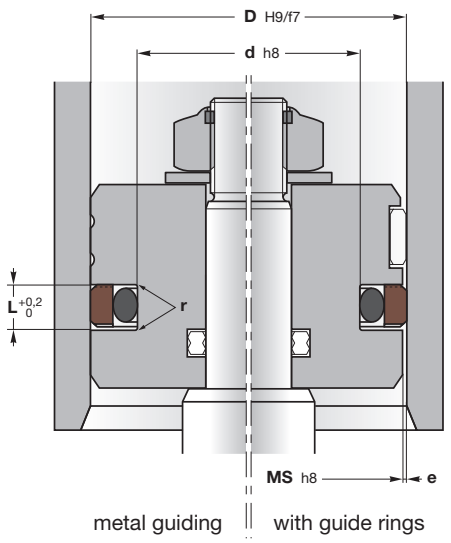

MS = D - 2e

Machining of housings: see pages 48-49

More information

On **www.all-tec-business.net**, click first on the reference and then on the material code to obtain the data sheet of the different materials.

10E/GR...A piston seal is a bi-directional piston seal for use in low to medium duty hydraulic systems.

The dynamic seal element offers exceptional low friction, high speed performances and high chemical compatibility. Side grooves ensure that pressure loads the energising component in all work conditions.

The seal is **commonly used** in applications such as mobile hydraulics, machine tools, injection moulding machines and hydraulic presses.

Radial notches on both sides of the seal ensure a fast **energising** of the sealing element.

Operating conditions	**see page 8**
Pressure	≤ 50 MPa
Temperature	-30°C to 100°C
Speed	≤ 15 m/s
Fluids	**see pages 22-45**

Materials	**see pages 10-19**
Dynamic sealing element ①	
10E/GR...A	PT55
10E/GR...A	PT15
15E/GR...A	PT53
Energising element ②	NBR 70 Sh A

Assembly	**see pages 54-59**
On one-piece pistons	

Advantages

- Small sections and simple groove design
- High extrusion resistance and long service service life
- Low break-out and running friction
- Compatibility with nearly all media due to the high chemical resistance of the sealing element and the wide selection of O-ring compounds
- No stick-slip

Please contact us for applications approaching maximum values.

D (mm) 10E/GR Standard serie	D (mm) 10E/GR-L Light serie	D (mm) 10E/GR-P Heavy serie	r (mm)	L (mm)	d (mm)	e (mm) 0-10 MPa	e (mm) 10-20 MPa	e (mm) 20-40 MPa	e (mm) 40-50 MPa	O-ring ②
8→14,9	15→39,9		0,4	2,2	**D** - 4,9	≤ 0,3	≤ 0,2	≤ 0,15	H8/f8	1,78
15→39,9	40→79,9		0,6	3,2	**D** - 7,3	≤ 0,4	≤ 0,25	≤ 0,15		2,62
40→79,9	80→132,9	15→39,9	1	4,2	**D** - 11	≤ 0,4	≤ 0,25	≤ 0,2		3,53
80→132,9	133→329,9	40→79,9	1,3	6,3	**D** - 15,5	≤ 0,5	≤ 0,3	≤ 0,2		5,34
133→329,9	330→669,9	80→132,9	1,8	8,1	**D** - 21	≤ 0,6	≤ 0,35	≤ 0,25		7
330→669,9	670→999,9	133→329,9	1,8	8,1	**D** - 24,5	≤ 0,7	≤ 0,5	≤ 0,3		7
670→999,9		330→669,9	2,5	9,5	**D** - 28					8,4
≥ 1000			3	13,8	**D** - 38					12

For special requirements (fluid, temperature, pressure, speed...) or applications approaching maximum values, please contact us. Other materials available: **FPM**, **HNBR**, **TNBR**, **EPDM**...

10E/GRINCH...A: Inch dimensions page 467

10E/GR-L: Light serie
10E/GR-P: Heavy serie

D	d	L	O-ring NBR 70 Sh A	Alternative reference	Reference
250	229	8,1	227,97 x 7		**10E/GR 2500A-55/4470**
260	239	8,1	234,32 x 7		**10E/GR 2600A-55/4470**
270	249	8,1	247 x 7		**10E/GR 2700A-55/4470**
280	259	8,1	253,37 x 7		**10E/GR 2800A-55/4470**
290	269	8,1	266,07 x 7		**10E/GR 2900A-55/4470**
295	274	8,1	272,4 x 7		**10E/GR 2950A-55/4470**
300	279	8,1	278,77 x 7		**10E/GR 3000A-55/4470**
310	289	8,1	285,1 x 7		**10E/GR 3100A-55/4470**
320	299	8,1	297,8 x 7		**10E/GR 3200A-55/4470**
330	305,5	8,1	304,17 x 7		**10E/GR 3300A-55/4470**
340	315,5	8,1	310,5 x 7		**10E/GR 3400A-55/4470**
350	325,5	8,1	316,87 x 7		**10E/GR 3500A-55/4470**
360	335,5	8,1	329,57 x 7		**10E/GR 3600A-15/4470**
	335,5	8,1	329,57 x 7		**10E/GR 3600A-55/4470**
370	345,5	8,1	342,27 x 7		**10E/GR 3700A-55/4470**
380	355,5	8,1	354,97 x 7		**10E/GR 3800A-55/4470**
390	365,5	8,1	354,97 x 7		**10E/GR 3900A-55/4470**
400	375,5	8,1	367,67 x 7		**10E/GR 4000A-55/4470**
420	395,5	8,1	393,07 x 7		**10E/GR 4200A-55/4470**
440	415,5	8,1	405,26 x 7		**10E/GR 4400A-55/4470**
450	425,5	8,1	417,96 x 7		**10E/GR 4500A-55/4470**
480	455,5	8,1	443,36 x 7		**10E/GR 4800A-55/4470**
500	475,5	8,1	468,76 x 7		**10E/GR 5000A-55/4470**
550	525,5	8,1	506,86 x 7		**10E/GR 5500A-55/4470**
600	575,5	8,1	557,66 x 7		**10E/GR 6000A-55/4470**

References printed in green are manufactured with a non-standard material

10E/GR...A seals with diameters between 20 and 1500 mm can be manufactured within short delivery time.
For prices and availability: **www.all-tec-business.net**

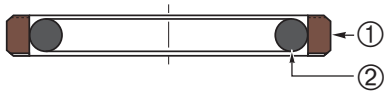

10E/GRINCH...A

Example of item code

10E/GRINCH - P 3000 A

All-Tec code | Serie | Diameter D (inch x 1000) | Profile

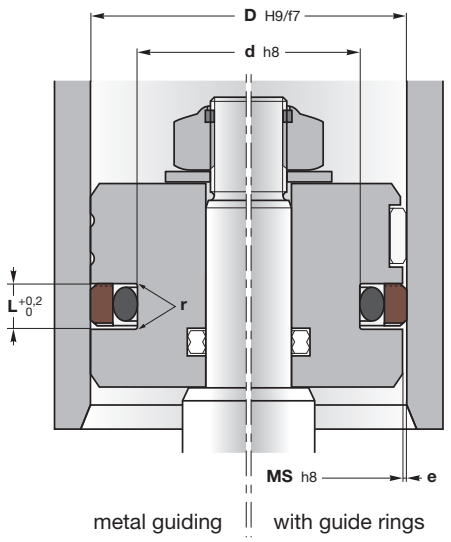

MS = D - 2e

Machining of housings: see pages 48-49

10E/GRINCH...A piston seal is a bi-directional piston seal for use in low to medium duty hydraulic systems.

The dynamic seal element offers exceptional low friction, high speed performances and high chemical compatibility. Side grooves ensure that pressure loads the energising component in all work conditions.

The seal is **commonly used** in applications such as mobile hydraulics, machine tools, injection moulding machines and hydraulic presses.

Radial notches on both sides of the seal ensure a fast **energising** of the sealing element.

Operating conditions	**see page 8**
Pressure	≤ 50 MPa
Temperature	-30°C to 100°C
Speed	≤ 15 m/s
Fluids	**see pages 22-45**

Materials	**see pages 10-19**
Dynamic sealing element ①	PT55
Energising element ②	NBR 70 Sh A

Assembly	**see pages 54-59**
On one-piece pistons	

Advantages

- Small sections and simple groove design
- High extrusion resistance and long service life
- Low break-out and running friction
- Compatibility with nearly all media due to the high chemical resistance of the sealing element and the wide selection of O-ring compounds
- No stick-slip

Please contact us for applications approaching maximum values.

More information

On **www.all-tec-business.net**, click first on the reference and then on the material code to obtain the data sheet of the different materials.

For special requirements (fluid, temperature, pressure, speed...) or applications approaching maximum values, please contact us. Other materials available: **FPM**, **HNBR**, **TNBR**, **EPDM**...

10E/GRINCH-L: Light serie
10E/GRINCH-P: Heavy serie

Inch dimensions				
D	**d**	**L**	**O-ring** NBR 70 Sh A	**Reference**
38,1	27,1	4,19	26,57 x 3,53	**10E/GRINCH-P 1500A**
44,45	33,45	4,19	32,92 x 3,53	**10E/GRINCH 1750A**
50,8	39,8	4,19	39,7 x 3,53	**10E/GRINCH 2000A**
57,15	46,15	4,19	46,04 x 3,53	**10E/GRINCH 2250A**
63,5	52,5	4,19	52,4 x 3,53	**10E/GRINCH 2500A**
69,85	58,85	4,19	58,74 x 3,53	**10E/GRINCH 2750A**
	53,35	6,3	53,34 x 5,34	**10E/GRINCH-P 2750A**
76,2	65,2	4,19	65,1 x 3,53	**10E/GRINCH 3000A**
	60,7	6,3	59,69 x 5,34	**10E/GRINCH-P 3000A**
88,9	73,4	6,3	72,39 x 5,34	**10E/GRINCH 3500A**
	77,9	4,19	75,79 x 3,53	**10E/GRINCH-L 3500A**
101,6	86,11	6,3	85,09 x 5,34	**10E/GRINCH 4000A**
	90,6	4,19	88,49 x 3,53	**10E/GRINCH-L 4000A**
114,3	98,81	6,3	97,79 x 5,34	**10E/GRINCH 4500A**
127	111,51	6,3	110,49 x 5,34	**10E/GRINCH 5000A**
139,7	118,69	8,1	116,84 x 7	**10E/GRINCH 5500A**
152,4	131,39	8,1	129,54 x 7	**10E/GRINCH 6000A**

10E/GRINCH...A seals with diameters between 20 and 1500 mm can be manufactured within short delivery time.
For prices and availability: **www.all-tec-business.net**

PTFE double acting piston seal with FPM O-ring

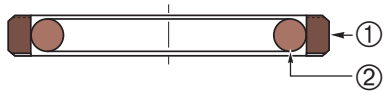

11E/GR...A

Example of item code

11E/GR 0800 A - 55/9975

All-Tec code | Diameter D (mm x 10) | Profile | Material ①/②

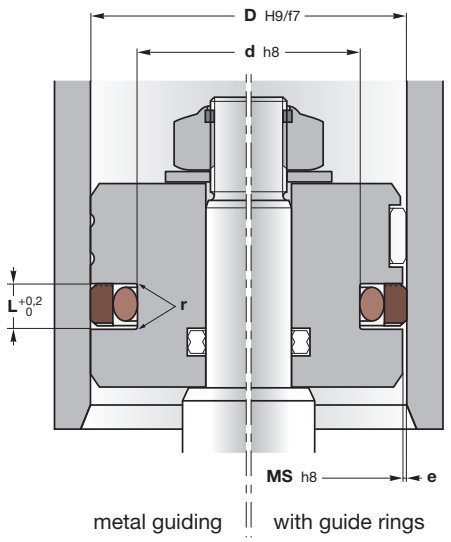

MS = D - 2e

Machining of housings: see pages 48-49

11E/GR...A piston seal is a bi-directional piston seal for use in low to medium duty hydraulic systems.

The dynamic seal element offers exceptional low friction, high speed performances and high chemical compatibility. Side grooves ensure that pressure loads the energising component in all work conditions.

The seal is **commonly used** in applications such as mobile hydraulics, machine tools, injection moulding machines and hydraulic presses.

Radial notches on both sides of the seal ensure a fast **energising** of the sealing element.

Operating conditions	**see page 8**
Pressure	≤ 50 MPa
Temperature	-10°C to 200°C
Speed	≤ 15 m/s
Fluids	**see pages 22-45**

Materials	**see pages 10-19**
Dynamic sealing element ①	PT55
Energising element ②	FPM 75 Sh A

Assembly	**see pages 54-59**
On one-piece pistons	

Advantages

- Small sections and simple groove design
- High extrusion resistance and long service life
- Low break-out and running friction
- Compatibility with nearly all media due to the high chemical resistance of the sealing element and the wide selection of O-ring compounds
- No stick-slip
- Large temperature range

Please contact us for applications approaching maximum values.

More information

On **www.all-tec-business.net**, click first on the reference and then on the material code to obtain the data sheet of the different materials.

D (mm) 11E/GR Standard serie	D (mm) 11E/GR-L Light serie	D (mm) 11E/GR-P Heavy serie	L (mm)	d (mm)	e (mm) 0-10 MPa	e (mm) 10-20 MPa	e (mm) 20-40 MPa	e (mm) 40-50 MPa	O-ring ②
8→14,9	15→39,9		2,2	**D** - 4,9	≤ 0,3	≤ 0,2	≤ 0,15	H8/f8	1,78
15→39,9	40→79,9		3,2	**D** - 7,3	≤ 0,4	≤ 0,25	≤ 0,15		2,62
40→79,9	80→132,9	15→39,9	4,2	**D** - 11	≤ 0,4	≤ 0,25	≤ 0,2		3,53
80→132,9	133→329,9	40→79,9	6,3	**D** - 15,5	≤ 0,5	≤ 0,3	≤ 0,2		5,34
133→329,9	330→669,9	80→132,9	8,1	**D** - 21	≤ 0,6	≤ 0,35	≤ 0,25		7
330→669,9	670→999,9	133→329,9	8,1	**D** - 24,5	≤ 0,7	≤ 0,5	≤ 0,3		7
670→999,9		330→669,9	9,5	**D** - 28					8,4
≥ 1000			13,8	**D** - 38					12

For special requirements (fluid, temperature, pressure, speed...) or applications approaching maximum values, please contact us. Other materials available: **FPM**, **HNBR**, **TNBR**, **EPDM**...

11E/GR-L: Light serie **11E/GR-P**: Heavy serie

FPM energising element					
D	**d**	**L**	**r**	**O-ring** FPM 75 Sh A	**Reference**
25	17,5	3,2	0,6	17,12 x 2,62	**11E/GR 0250A-55/9975**
30	22,5	3,2	0,6	21,89 x 2,62	**11E/GR 0300A-55/9975**
32	24,5	3,2	0,6	23,47 x 2,62	**11E/GR 0320A-55/9975**
35	27,5	3,2	0,6	26,64 x 2,62	**11E/GR 0350A-55/9975**
40	29	4,2	1	28,17 x 3,53	**11E/GR 0400A-55/9975**
45	34	4,2	1	32,92 x 3,53	**11E/GR 0450A-55/9975**
48	37	4,2	1	36,09 x 3,53	**11E/GR 0480A-55/9975**
50	39	4,2	1	37,69 x 3,53	**11E/GR 0500A-55/9975**
52	41	4,2	1	40,87 x 3,53	**11E/GR 0520A-55/9975**
55	44	4,2	1	44,04 x 3,53	**11E/GR 0550A-55/9975**
60	49	4,2	1	47,22 x 3,53	**11E/GR 0600A-55/9975**
63	52	4,2	1	50,39 x 3,53	**11E/GR 0630A-55/9975**
65	54	4,2	1	53,57 x 3,53	**11E/GR 0650A-55/9975**
70	59	4,2	1	56,74 x 3,53	**11E/GR 0700A-55/9975**
75	64	4,2	1	63,09 x 3,53	**11E/GR 0750A-55/9975**
80	64,5	6,3	1,3	62,87 x 5,34	**11E/GR 0800A-55/9975**
85	69,5	6,3	1,3	69,22 x 5,34	**11E/GR 0850A-55/9975**
90	74,5	6,3	1,3	72,39 x 5,34	**11E/GR 0900A-55/9975**
95	79,5	6,3	1,3	78,74 x 5,34	**11E/GR 0950A-55/9975**
100	84,5	6,3	1,3	81,92 x 5,34	**11E/GR 1000A-55/9975**
110	94,5	6,3	1,3	91,44 x 5,34	**11E/GR 1100A-55/9975**
120	104,5	6,3	1,3	104,14 x 5,34	**11E/GR 1200A-55/9975**
125	109,5	6,3	1,3	107,32 x 5,34	**11E/GR 1250A-55/9975**
130	114,5	6,3	1,3	113,67 x 5,34	**11E/GR 1300A-55/9975**
140	119	8,1	1,8	116,84 x 7	**11E/GR 1400A-55/9975**
150	129	8,1	1,8	126,37 x 7	**11E/GR 1500A-55/9975**
160	139	8,1	1,8	135,89 x 7	**11E/GR 1600A-55/9975**
180	159	8,1	1,8	158,12 x 7	**11E/GR 1800A-55/9975**
200	179	8,1	1,8	177,17 x 7	**11E/GR 2000A-55/9975**
220	199	8,1	1,8	196,22 x 7	**11E/GR 2200A-55/9975**
250	229	8,1	1,8	227,97 x 7	**11E/GR 2500A-55/9975**

All other dimensions from series 10E/GR, 10E/GR-L and 10E/GR-P are also available with FPM O-rings.

11E/GR...A seals with diameters between 20 and 1500 mm can be manufactured within short delivery time.
For prices and availability: **www.all-tec-business.net**

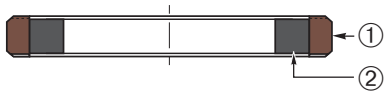

10E/GRKA

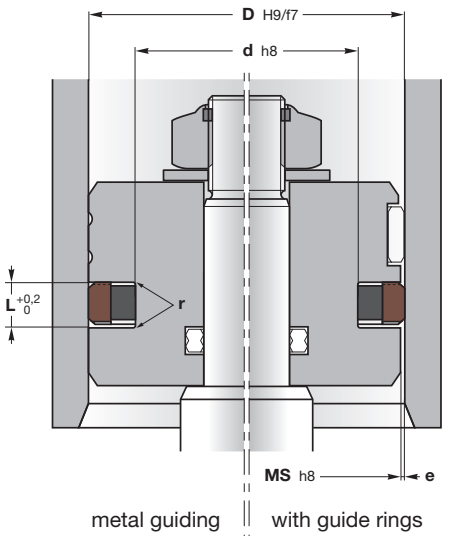

MS = D - 2e

Machining of housings: see pages 48-49

Pressure	0-10 MPa	10-20 MPa	20-40 MPa	40-50 MPa
L	**e** (mm)			
3,2	≤ 0,4	≤ 0,25	≤ 0,15	H8/f8
4,2	≤ 0,4	≤ 0,25	≤ 0,2	
6,3	≤ 0,5	≤ 0,3	≤ 0,2	
8,1	≤ 0,6	≤ 0,35	≤ 0,25	

10E/GRKA double acting piston seal consists of a PTFE piston sealing ring and an elastomer square ring as preloading element. The dynamic seal element offers exceptional low friction and high speed perfomances.

The material combination of the slipper ring (PTFE) and the square ring (elastomer) makes this product suitable for a wide range of applications, especially for aggressive media and/or high temperatures. Side grooves ensure that pressure loads the energising component in all work conditions.

The seal is used in control cylinders, in servo controlled systems, machine tools as **quick acting** cylinders.

Radial notches on both sides of the seal ensure a fast **energising** of the sealing element.

Operating conditions	**see page 8**
Pressure	≤ 50 MPa
Temperature	-30°C to 100°C
Speed	≤ 15 m/s
Fluids	**see pages 22-45**

Materials	**see pages 10-19**
Dynamic sealing element ①	PT55
Energising element ②	NBR1970

Assembly	**see pages 54-59**
On one-piece pistons	

Advantages

- Small sections and simple groove design
- High extrusion resistance and long service life
- Low break-out and running friction
- No stick-slip
- Compatibility with nearly all media due to the high chemical resistance of the sealing element and the wide selection of square-ring compounds

Please contact us for applications approaching maximum values.

More information

On **www.all-tec-business.net**, click first on the reference and then on the material code to obtain the data sheet of the different materials.

For special requirements (fluid, temperature, pressure, speed...) or applications approaching maximum values, please contact us. Other materials available: **FPM**, **HNBR**, **TNBR**, **EPDM**...

D	d	L	r	Reference
25	17,5	3,2	0,3	**10E/GRKA 25**
32	24,5	3,2	0,3	**10E/GRKA 32**
40	29	4,2	0,3	**10E/GRKA 40**
45	34	4,2	0,3	**10E/GRKA 45**
50	39	4,2	0,3	**10E/GRKA 50**
50	34,5	6,3	0,3	**10E/GRKA 50/1**
55	44	4,2	0,3	**10E/GRKA 55**
60	49	4,2	0,3	**10E/GRKA 60**
60	44,5	6,3	0,3	**10E/GRKA 60/1**
63	52	4,2	0,3	**10E/GRKA 63**
65	54	4,2	0,3	**10E/GRKA 65**
70	59	4,2	0,3	**10E/GRKA 70**
70	54,5	6,3	0,3	**10E/GRKA 70/1**
75	64	4,2	0,3	**10E/GRKA 75**
80	64,5	6,3	0,3	**10E/GRKA 80**
85	69,5	6,3	0,3	**10E/GRKA 85**
90	74,5	6,3	0,3	**10E/GRKA 90**
95	79,5	6,3	0,3	**10E/GRKA 95**
100	84,5	6,3	0,3	**10E/GRKA 100**
100	79	8,1	0,4	**10E/GRKA 100/1**
105	89,5	6,3	0,3	**10E/GRKA 105**
110	94,5	6,3	0,3	**10E/GRKA 110**
115	99,5	6,3	0,3	**10E/GRKA 115**
120	104,5	6,3	0,3	**10E/GRKA 120**
125	109,5	6,3	0,3	**10E/GRKA 125**
130	114,5	6,3	0,3	**10E/GRKA 130**
130	109	8,1	0,4	**10E/GRKA 130/1**
135	114	8,1	0,4	**10E/GRKA 135**
140	119	8,1	0,4	**10E/GRKA 140**
145	124	8,1	0,4	**10E/GRKA 145**
150	129	8,1	0,4	**10E/GRKA 150**
155	134	8,1	0,4	**10E/GRKA 155**
160	139	8,1	0,4	**10E/GRKA 160**
170	149	8,1	0,4	**10E/GRKA 170**
180	159	8,1	0,4	**10E/GRKA 180**
190	169	8,1	0,4	**10E/GRKA 190**
200	179	8,1	0,4	**10E/GRKA 200**
220	199	8,1	0,4	**10E/GRKA 220**
250	229	8,1	0,4	**10E/GRKA 250**
280	259	8,1	0,4	**10E/GRKA 280**
320	299	8,1	0,4	**10E/GRKA 320**

10E/GRKA seals with diameters between 20 and 1500 mm can be manufactured within short delivery time.
For prices and availability: **www.all-tec-business.net**

PTFE heavy duty piston seal

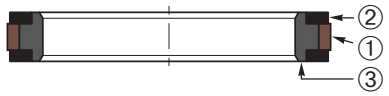

10PHD

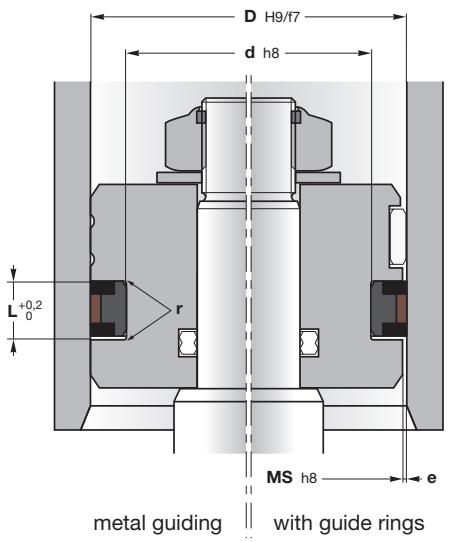

MS = D - 2e

Machining of housings: see pages 48-49

0-30 MPa	30-40 MPa
e (mm)	
≤ 0,5	≤ 0,3

10PHD piston seal is a combination of a PTFE sealing element energised by an elastomer profile ring, completed with two back-up rings.

The activated **back-up rings** offer a good protection against extrusion and ensure a long service life.

Operating conditions	**see page 8**
Pressure	≤ 40 MPa
Temperature	-30°C to 110°C
Speed	≤ 1,5 m/s
Fluids	**see pages 22-45**

Materials	**see pages 10-19**
Sealing element ①	PT53
Anti-extrusion rings ②	POM
Energising element ③	NBR3380

Assembly	**see pages 54-59**
On one-piece pistons	

Advantages

- Simple groove design
- Small sections
- Extrusion resistance at high pressure
- Excellent abrasion resistance
- Low friction
- No stick-slip

Please contact us for applications approaching maximum values.

More information

On **www.all-tec-business.net**, click first on the reference and then on the material code to obtain the data sheet of the different materials.

For special requirements (fluid, temperature, pressure, speed...) or applications approaching maximum values, please contact us. Other materials available: **FPM**, **HNBR**, **TNBR**, **EPDM**...

D	d	L	r	Reference
40	30	8	0,3	**10PHD 4030**
45	31	9	0,3	**10PHD 4531**
50	36	9	0,3	**10PHD 5036**
50	40	8	0,3	**10PHD 5040**
55	41	9	0,3	**10PHD 5541**
60	46	9	0,3	**10PHD 6046**
60	50	8	0,3	**10PHD 6050**
63	48	11	0,5	**10PHD 6348**
63	53	8	0,3	**10PHD 6353**
65	50	11	0,5	**10PHD 6550**
70	55	11	0,5	**10PHD 7055**
70	60	8	0,3	**10PHD 7060**
75	60	11	0,5	**10PHD 7560**
80	65	11	0,5	**10PHD 8065**
80	65	12,5	0,5	**10PHD 8065/1**
85	70	11	0,5	**10PHD 8570**
90	75	11	0,5	**10PHD 9075**
90	75	12,5	0,5	**10PHD 9075/1**
95	80	11	0,5	**10PHD 9580**
100	85	12,5	0,5	**10PHD 10085**
105	88	14	0,5	**10PHD 10588**
105	90	12,5	0,5	**10PHD 10590**
110	95	12,5	0,5	**10PHD 11095**
115	100	12,5	0,5	**10PHD 115100**
120	105	12,5	0,5	**10PHD 120105**
125	102	16	0,6	**10PHD 125102**
125	110	12,5	0,5	**10PHD 125110**
130	107	16	0,6	**10PHD 130107**
135	112	16	0,6	**10PHD 135112**
140	117	16	0,6	**10PHD 140117**
140	125	12,5	0,5	**10PHD 140125**
145	122	16	0,6	**10PHD 145122**
150	127	16	0,6	**10PHD 150127**

D	d	L	r	Reference
150	135	12,5	0,5	**10PHD 150135**
155	132	16	0,6	**10PHD 155132**
160	137	16	0,6	**10PHD 160137**
160	145	12,5	0,5	**10PHD 160145**
165	142	16	0,6	**10PHD 165142**
170	147	16	0,6	**10PHD 170147**
170	155	12,5	0,6	**10PHD 170155**
175	152	16	0,6	**10PHD 175152**
180	157	16	0,6	**10PHD 180157**
180	165	12,5	0,5	**10PHD 180165**
185	162	16	0,6	**10PHD 185162**
190	167	16	0,6	**10PHD 190167**
195	172	16	0,6	**10PHD 195172**
200	177	16	0,6	**10PHD 200177**
200	180	16	0,6	**10PHD 200180**
210	187	16	0,6	**10PHD 210187**
220	197	16	0,6	**10PHD 220197**
225	202	16	0,6	**10PHD 225202**
230	207	16	0,6	**10PHD 230207**
240	217	16	0,6	**10PHD 240217**
250	222	17,5	0,6	**10PHD 250222**
250	230	16	0,6	**10PHD 250230**
260	232	17,5	0,6	**10PHD 260232**
270	242	17,5	0,6	**10PHD 270242**
280	252	17,5	0,6	**10PHD 280252**
290	262	17,5	0,6	**10PHD 290262**
300	272	17,5	0,6	**10PHD 300272**
320	292	17,5	0,6	**10PHD 320292**

10PHD seals with diameters between 20 and 1500 mm can be manufactured within short delivery time.
For prices and availability: **www.all-tec-business.net**

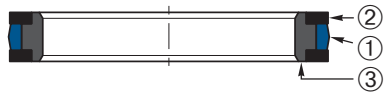

10PHD.../PU

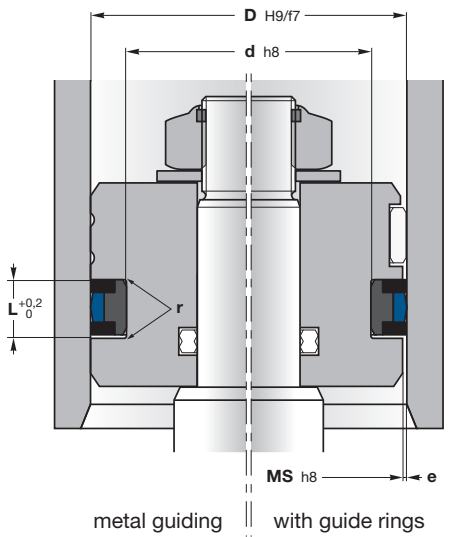

MS = D - 2e

Machining of housings: see pages 48-49

0-30 MPa	30-40 MPa
e (mm)	
≤ 0,5	≤ 0,3

10PHD.../PU piston seal is a combination of a PU sealing element energised by an elastomer profile ring, completed with two back-up rings.

The activated **back-up rings** offer a good protection against extrusion and ensure a long service life.

Operating conditions	see page 8
Pressure	≤ 40 MPa
Temperature	-30°C to 110°C
Speed	≤ 0,5 m/s
Fluids	see pages 22-45

Materials	see pages 10-19
Sealing element ①	PU38
Anti-extrusion rings ②	POM84
Energising element ③	NBR8480

Assembly	see pages 54-59
On one-piece pistons	

Advantages

- Simple groove design
- Small sections
- Extrusion resistance at high pressure
- Excellent abrasion resistance
- Low friction

Please contact us for applications approaching maximum values.

More information

On **www.all-tec-business.net**, click first on the reference and then on the material code to obtain the data sheet of the different materials.

For special requirements (fluid, temperature, pressure, speed...) or applications approaching maximum values, please contact us. Other materials available: **FPM**, **HNBR**, **TNBR**, **EPDM**...

D	d	L	r	Reference
50	36	9	0,3	**10PHD 5036/PU**
55	41	9	0,3	**10PHD 5541/PU**
60	46	9	0,3	**10PHD 6046/PU**
60	50	8	0,3	**10PHD 6050/PU**
63	48	11	0,5	**10PHD 6348/PU**
65	50	11	0,5	**10PHD 6550/PU**
70	55	11	0,5	**10PHD 7055/PU**
75	60	11	0,5	**10PHD 7560/PU**
80	65	11	0,5	**10PHD 8065/PU**
80	70	11	0,5	**10PHD 8070/PU**
85	70	11	0,5	**10PHD 8570/PU**
90	75	11	0,5	**10PHD 9075/PU**
95	80	11	0,5	**10PHD 9580/PU**
100	85	12,5	0,5	**10PHD 10085/PU**
105	88	14	0,5	**10PHD 10588/PU**
105	90	12,5	0,5	**10PHD 10590/PU**
110	95	12,5	0,5	**10PHD 11095/PU**
115	100	12,5	0,5	**10PHD 115100/PU**
120	105	12,5	0,5	**10PHD 120105/PU**
125	102	16	0,6	**10PHD 125102/PU**
130	107	16	0,6	**10PHD 130107/PU**
135	112	16	0,6	**10PHD 135112/PU**
140	117	16	0,6	**10PHD 140117/PU**
145	122	16	0,6	**10PHD 145122/PU**
150	127	16	0,6	**10PHD 150127/PU**
160	137	16	0,6	**10PHD 160137/PU**
170	147	16	0,6	**10PHD 170147/PU**
190	167	16	0,6	**10PHD 190167/PU**
200	177	16	0,6	**10PHD 200177/PU**
225	202	16	0,6	**10PHD 225202/PU**
250	222	17,5	0,6	**10PHD 250222/PU**
250	227	16	0,6	**10PHD 250227/PU**

10PHD.../PU seals with diameters between 20 and 1500 mm can be manufactured within short delivery time.
For prices and availability: **www.all-tec-business.net**

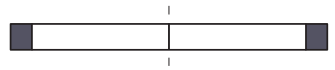

10KRGG...GS

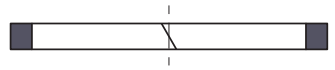

10KRGG...SS

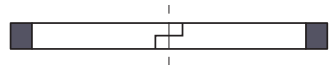

10KRGG...US

10KRGG...GAS

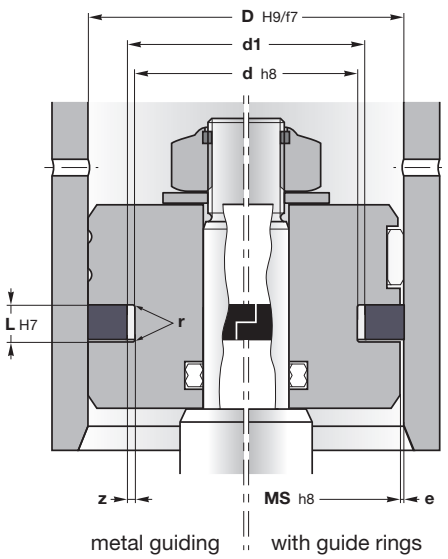

MS = D - 2e

Machining of housings: see pages 48-49

D (mm)	z (mm)	r (mm)	e (mm)
≤ 100	0,5	0,15	0,5
> 100	0,8	0,3	1

10KRGG piston rings from special cast iron material are used in exceptional applications demanding performance in temperature and velocity.

In comparison to other seals, they are not sensitive to pressures peaks.

Operating conditions	**see page 8**
Pressure	≤ 200 MPa
Temperature	-60°C to 250°C
Speed	≤ 40 m/s
Fluids	**see pages 22-45**
Materials	**see pages 10-19**
Sealing element	Cast iron
Assembly	**see pages 54-59**
On one-piece pistons	

Advantages

- Good dynamic sealing
- Perfect extrusion resistance
- Good abrasion resistance
- Long service life
- Extreme temperature range of application
- Overtravelling of cylinder bores possible without damage
- In combination with elastomer seals, this can be put to protective use against pressure peaks and diesel effects

Please contact us for applications approaching maximum values.

More information

On **www.all-tec-business.net**, click first on the reference and then on the material code to obtain the data sheet of the material.

D	d	d1	L	Reference
25	22	23	3	**10KRGG 025 US**
40	35	36	2	**10KRGG 040 US**
50	44,4	45,4	2,5	**10KRGG 050 US**
60	54	55	2,5	**10KRGG 060 US**
70	63,5	64,5	2,5	**10KRGG 070 US**
80	72,6	73,6	2,5	**10KRGG 080 GS**
100	90,4	92	2,5	**10KRGG 100 US**
125	113,8	115,4	4	**10KRGG 125 US**
150	137	138,6	4	**10KRGG 150 US**
180	166,4	168	5	**10KRGG 180 US**

10KRGG seals with diameters between 20 and 1500 mm can be manufactured within short delivery time.
For prices and availability: **www.all-tec-business.net**

Double acting piston seal with guide rings

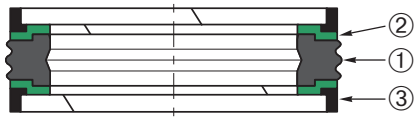

10DBS Profile a

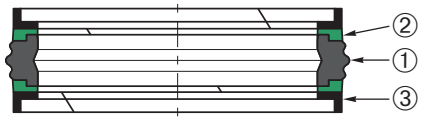

10DBS Profile b

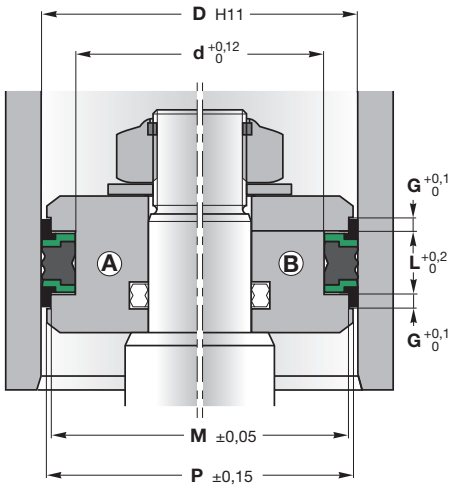

Machining of housings: see pages 48-49

10DBS piston seal is a double acting seal and guide element composed of a sealing rubber element, two anti-extrusion rings and two guide rings.

The rubber part has a low compression set which ensures good sealing performance. It is designed with three seal edges which share the load against the cylinder tube. The three seal edges also form two cavities which keep small quantities of fluid that **increase the service life**. The design of the static side provides a wide contact area and prevents distorsion inside the groove during installation.

The back-up rings prevent extrusion into the gap and **avoid the rotation** of the rubber part. The function of the guide rings is to guide the piston in the cylinder tube and to support radial load. This piston seal is available in different profiles depending on the existing installation groove.

Operating conditions	**see page 8**
Pressure	≤ 35 MPa
Temperature	-30°C to 100°C
Speed	≤ 0,5 m/s
Fluids	**see pages 22-45**

Materials	**see pages 10-19**
Seal ①	NBR2475 or NBR3470
Anti-extrusion rings ②	TPE63
Guide rings ③	POM/GF1

Assembly	**see pages 54-59**
On one-piece pistons Ⓐ	
On two-piece pistons Ⓑ	

Advantages

- Efficient sealing at high and low pressure
- Easy installation on monobloc pistons
- Guiding and sealing are performed by the seal
- Good results with drawn tubes
- Simple design for one piece pistons

Please contact us for applications approaching maximum values.

More information

On **www.all-tec-business.net**, click first on the reference and then on the material code to obtain the data sheet of the different materials.

For special requirements (fluid, temperature, pressure, speed...) or applications approaching maximum values, please contact us. Other materials available: **FPM**, **HNBR**, **TNBR**, **EPDM**...

11DBS...FPM page 487 **10DBS/I**: Inch dimensions page 489

D	d	L	G	M	P	ISO 6547	Profile 10DBS	Alternative reference	Reference
20	11	13,5	2,1	17	19		a		**10DBS 20 11/M**
22	13	13,5	2,1	19	21		a		**10DBS 22 13/M**
25	15	12	4	21	23		a		**10DBS 25 15/1**
	15	12,5	4	22	24	•	a		**10DBS 25 15/ISO**
	15	16,4	6,35	21,45	23,5		a		**10DBS 25 15**
	16	13,5	2,1	22	24		a		**10DBS 25 16/M**
	17	13,5	3,2	21	24,4		b		**10DBS 25 17/SI**
28	19	13,5	2,1	25	27		a		**10DBS 28 19/M**
30	17	15,4	6,35	26,5	28,5		a	**15DBSE 30 17**	**10DBS 30 17**
	21	13,5	2,1	27	29		a	**15DBSE 30 21/M**	**10DBS 30 21/M**
32	22	12,5	4	29	31	•	a		**10DBS 32 22/ISO**
	22	15,5	2,6	28	31		a	**15DBSE 32 22/M**	**10DBS 32 22/M**
	22	16,4	6,35	28,5	30,5		a	**15DBSE 32 22**	**10DBS 32 22**
	24	10	4	29	31	•	a		**10DBS 32 24/ISO**
	24	15,5	3,2	28	31,4		b	**15DBSE 32 24/SI**	**10DBS 32 24/SI**
35	25	15,5	2,6	31	34		a		**10DBS 35 25/M**
	25	16,4	6,35	31,4	33,5		a	**15DBSE 35 25**	**10DBS 35 25**
	27	15,5	3,2	31	34,4		b		**10DBS 35 27/SI**
40	24	18,4	6,35	35,4	38,5		a	**15DBSE 40 24**	**10DBS 40 24**
	26	15,5	2,6	36	39		a	**15DBSE 40 26/M**	**10DBS 40 26/M**
	30	12,5	4	36	38		a	**15DBSE 40 30/1**	**10DBS 40 30/1**
	30	12,5	4	37	39	•	a	**15DBSE 40 30/ISO**	**10DBS 40 30/ISO**
	30	16,4	6,35	35,4	38,5		a	**15DBSE 40 30**	**10DBS 40 30**
	32	10	4	37	39	•	a		**10DBS 40 32/ISO**
	32	15,5	3,2	36	39,4		b	**15DBSE 40 32/SI**	**10DBS 40 32/SI**
42	28	15,5	2,6	38	41		a		**10DBS 42 28/M**
45	29	18,4	6,35	40,4	43,5		a	**15DBSE 45 29**	**10DBS 45 29**
	31	15,5	2,6	41	44		a	**15DBSE 45 31/M**	**10DBS 45 31/M**
	35	16,4	6,35	40,4	43,5		a	**15DBSE 45 35**	**10DBS 45 35**
	37	15,5	3,2	41	44,4		b		**10DBS 45 37/SI**
50	34	18,4	6,35	45,41	48,66		a	**15DBSE 50 34**	**10DBS 50 34**
	34	20,5	3,1	46	49		a	**15DBSE 50 34/M**	**10DBS 50 34/M**
	35	20	5	46	48,5	•	a		**10DBS 50 35/ISO**
	38	20,5	4,2	46	49,4		b	**15DBSE 50 38/SI**	**10DBS 50 38/SI**
	40	12,5	4	47	49	•	a		**10DBS 50 40/ISO**
55	39	18,4	6,35	50,37	53,65		a	**15DBSE 55 39**	**10DBS 55 39**
	39	20,5	3,1	51	54		a	**15DBSE 55 39/M**	**10DBS 55 39/M**
	43	20,5	4,2	51	54,4		b		**10DBS 55 43/SI**
	45	12,5	4	52	54	•	a		**10DBS 55 45/ISO**
56	40	20,5	3,1	52	55		a		**10DBS 56 40/M**

Double acting piston seal with guide rings

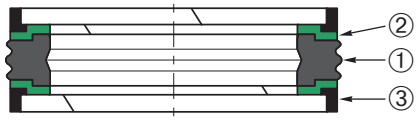

10DBS Profile a

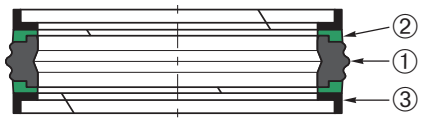

10DBS Profile b

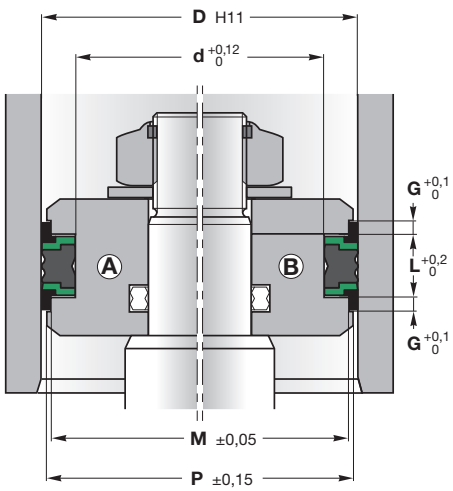

Machining of housings: see pages 48-49

10DBS piston seal is a double acting seal and guide element composed of a sealing rubber element, two anti-extrusion rings and two guide rings.

The rubber part has a low compression set which ensures good sealing performance. It is designed with three seal edges which share the load against the cylinder tube. The three seal edges also form two cavities which keep small quantities of fluid that **increase the service life**. The design of the static side provides a wide contact area and prevents distorsion inside the groove during installation.

The back-up rings prevent extrusion into the gap and **avoid the rotation** of the rubber part. The function of the guide rings is to guide the piston in the cylinder tube and to support radial load. This piston seal is available in different profiles depending on the existing installation groove.

Operating conditions	**see page 8**
Pressure	≤ 35 MPa
Temperature	-30°C to 100°C
Speed	≤ 0,5 m/s
Fluids	**see pages 22-45**

Materials	**see pages 10-19**
Seal ①	NBR2475 or NBR3470
Anti-extrusion rings ②	TPE63
Guide rings ③	POM/GF1

Assembly	**see pages 54-59**
On one-piece pistons Ⓐ	
On two-piece pistons Ⓑ	

Advantages

- Efficient sealing at high and low pressure
- Easy installation on monobloc pistons
- Guiding and sealing are performed by the seal
- Good results with drawn tubes
- Simple design for one piece pistons

Please contact us for applications approaching maximum values.

More information

On **www.all-tec-business.net**, click first on the reference and then on the material code to obtain the data sheet of the different materials.

For special requirements (fluid, temperature, pressure, speed...) or applications approaching maximum values, please contact us. Other materials available: **FPM**, **HNBR**, **TNBR**, **EPDM**...

11DBS...FPM page 487 **10DBS/I**: Inch dimensions page 489

D	d	L	G	M	P	ISO 6547	Profile 10DBS	Alternative reference	Reference
60	44	18,4	6,35	55,39	58,65		a	**15DBSE 60 44**	**10DBS 60 44**
	44	20,5	3,1	56	59		a	**15DBSE 60 44/M**	**10DBS 60 44/M**
	48	20,5	4,2	56	59,4		b	**15DBSE 60 48/SI**	**10DBS 60 48/SI**
63	47	18,4	6,35	58,39	61,63		a	**15DBSE 63 47**	**10DBS 63 47**
	47	19,4	6,35	58,4	61,5		a	**15DBSE 63 47/2**	**10DBS 63 47/2**
	47	20,5	3,1	59	62		a	**15DBSE 63 47/M**	**10DBS 63 47/M**
	48	20	5	59	61,5	•	a		**10DBS 63 48/ISO**
	51	20,5	4,2	59	62,4		b	**15DBSE 63 51/SI**	**10DBS 63 51/SI**
	53	12,5	4	60	62	•	a		**10DBS 63 53/ISO**
65	49	20,5	4,1	61	64		a	**15DBSE 65 49/M**	**10DBS 65 49/M**
	50	18,4	6,35	60,41	63,64		a	**15DBSE 65 50**	**10DBS 65 50**
70	50	22,4	6,35	64,18	68,34		a	**15DBSE 70 50**	**10DBS 70 50**
	54	20,5	3,1	66	69		a	**15DBSE 70 54/M**	**10DBS 70 54/M**
	55	20	5	66	68,5	•	a		**10DBS 70 55/ISO**
	58	20,5	4,2	66	69,4		b	**15DBSE 70 58/SI**	**10DBS 70 58/SI**
75	55	22,4	6,35	69,18	73,32		a	**15DBSE 75 55**	**10DBS 75 55**
	59	20,5	3,1	71	74		a		**10DBS 75 59/M**
80	60	22,4	6,35	74,16	78,34		a	**15DBSE 80 60**	**10DBS 80 60**
	60	25	6,3	75	78	•	a		**10DBS 80 60/ISO**
	62	22,5	3,6	76	79		a	**15DBSE 80 62/M**	**10DBS 80 62/M**
	65	20	5	76	78,5	•	a		**10DBS 80 65/ISO**
	66	22,5	5,2	76	79,4		b	**15DBSE 80 66/SI**	**10DBS 80 66/SI**
85	65	22,4	6,35	79,16	83,34		a	**15DBSE 85 65**	**10DBS 85 65**
90	70	22,4	6,35	84,15	88,31		a	**15DBSE 90 70**	**10DBS 90 70**
	72	22,5	3,6	86	89		a	**15DBSE 90 72/M**	**10DBS 90 72/M**
	75	20	5	86	88,5	•	a		**10DBS 90 75/ISO**
90	76	22,5	5,2	86	89,4		b	**15DBSE 90 76/SI**	**10DBS 90 76/SI**
95	75	22,4	6,35	89,15	93,31		a	**15DBSE 95 75**	**10DBS 95 75**
100	75	22,4	6,35	93,14	98,05		a	**15DBSE 100 75**	**10DBS 100 75**
	80	25	6,3	95	98	•	a		**10DBS 100 80/ISO**
	80	25,4	6,35	94,15	98,31		a		**10DBS 100 80**
100	82	22,5	3,6	96	99		a	**15DBSE 100 82/M**	**10DBS 100 82/M**
	85	20	5	96	98,5	•	a		**10DBS 100 85/ISO**
	86	22,5	5,2	96	99,4		b	**15DBSE 100 86/SI**	**10DBS 100 86/SI**
105	80	22,4	6,35	98,09	103,03		a	**15DBSE 105 80**	**10DBS 105 80**
110	85	22,4	6,35	103,1	108		a	**15DBSE 110 85**	**10DBS 110 85**
	85	25,4	6,35	103,1	108		a		**10DBS 110 85/1**
	90	25,4	6,35	104,1	108,3		a		**10DBS 110 90**
110	92	22,5	3,6	106	109		a	**15DBSE 110 92/M**	**10DBS 110 92/M**
	95	20	5	105	108,5		a		**10DBS 110 95**
	96	22,5	5,2	106	109,4		b	**15DBSE 110 96/SI**	**10DBS 110 96/SI**

10DBS seals with diameters between 20 and 1500 mm can be manufactured within short delivery time.
For prices and availability: **www.all-tec-business.net**

Double acting piston seal with guide rings

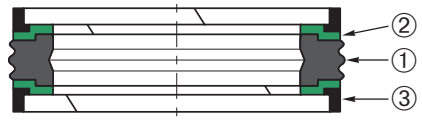

10DBS Profile a

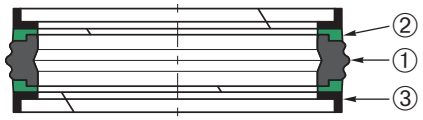

10DBS Profile b

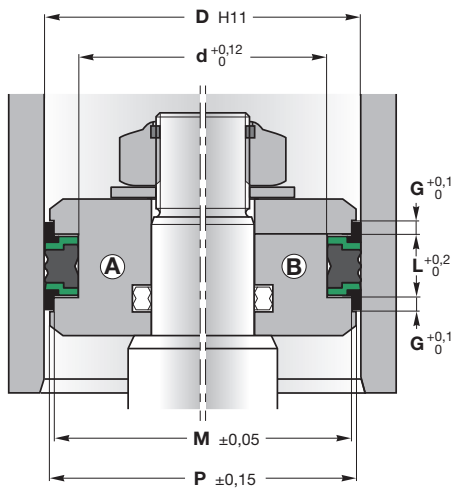

Machining of housings: see pages 48-49

10DBS piston seal is a double acting seal and guide element composed of a sealing rubber element, two anti-extrusion rings and two guide rings.

The rubber part has a low compression set which ensures good sealing performance. It is designed with three seal edges which share the load against the cylinder tube. The three seal edges also form two cavities which keep small quantities of fluid that **increase the service life**. The design of the static side provides a wide contact area and prevents distorsion inside the groove during installation.

The back-up rings prevent extrusion into the gap and **avoid the rotation** of the rubber part. The function of the guide rings is to guide the piston in the cylinder tube and to support radial load. This piston seal is available in different profiles depending on the existing installation groove.

Operating conditions	**see page 8**
Pressure	≤ 35 MPa
Temperature	-30°C to 100°C
Speed	≤ 0,5 m/s
Fluids	**see pages 22-45**

Materials	**see pages 10-19**
Seal ①	NBR2475 or NBR3470
Anti-extrusion rings ②	TPE63
Guide rings ③	POM/GF1

Assembly	**see pages 54-59**
On one-piece pistons Ⓐ	
On two-piece pistons Ⓑ	

Advantages

- Efficient sealing at high and low pressure
- Easy installation on monobloc pistons
- Guiding and sealing are performed by the seal
- Good results with drawn tubes
- Simple design for one piece pistons

Please contact us for applications approaching maximum values.

More information

On **www.all-tec-business.net**, click first on the reference and then on the material code to obtain the data sheet of the different materials.

For special requirements (fluid, temperature, pressure, speed...) or applications approaching maximum values, please contact us. Other materials available: **FPM**, **HNBR**, **TNBR**, **EPDM**...

11DBS...FPM page 487 **10DBS/I**: Inch dimensions page 489

D	d	L	G	M	P	ISO 6547	Profile 10DBS	Alternative reference	Reference
115	90	22,4	6,35	108,1	113,02		a	15DBSE 115 90	10DBS 115 90
	97	22,5	3,6	111	114		a	15DBSE 115 97/M	10DBS 115 97/M
120	95	22,4	6,35	113,1	118,02		a	15DBSE 120 95	10DBS 120 95
	106	22,5	5,2	116	119,4		b	15DBSE 120106/SI	10DBS 120106/SI
125	100	25,4	6,35	118,08	122,96		a	15DBSE 125100	10DBS 125100
	100	32	10	119	123	•	a		10DBS 125100/ISO
	103	26,5	5,1	121	124		a	15DBSE 125103/M	10DBS 125103/M
	105	25	6,35	119,1	123,3		a		10DBS 125105
	105	25	6,3	120	123	•	a		10DBS 125105/ISO
	108	26,5	7,2	121	124,4		b	15DBSE 125108/SI	10DBS 125108/SI
130	105	25,4	9,52	122,6	127,5		a	15DBSE 130105	10DBS 130105
	105	25,4	6,35	123,1	128		a		10DBS 130105/1
	110	25,3	6,4	124,1	128,3		a		10DBS 130110
	113	26,5	7,2	126	129,4		b		10DBS 130113/SI
135	110	25,4	9,52	127,6	132,5		a	15DBSE 135110	10DBS 135110
	110	25,4	6,35	128,1	133		a		10DBS 135110/1
140	115	25,4	9,52	132,6	137,5		a	15DBSE 140115	10DBS 140115
	115	25,4	6,35	133	138		a	15DBSE 140115/1	10DBS 140115/1
	118	26,5	5,1	136	139		a	15DBSE 140118/M	10DBS 140118/M
	120	25	6,3	135	138	•	a		10DBS 140120/ISO
	123	26,5	7,2	136	139,4		b		10DBS 140123/SI
145	120	25,4	9,52	137,6	142,5		a		10DBS 145120
	120	25,4	6,35	138,3	142,95		a		10DBS 145120/1
150	125	25,4	9,52	142,6	147,5		a	15DBSE 150125	10DBS 150125
	125	25,4	6,35	143	148		a		10DBS 150125/1
	128	26,5	5,1	146	149		a	15DBSE 150128/M	10DBS 150128/M
	130	25,4	6,35	144,1	148,3		a		10DBS 150130
	133	26,5	7,2	146	149,4		b		10DBS 150133/SI
155	130	25,4	9,52	147,6	152,5		a		10DBS 155130
	130	25,4	6,35	148	153		a		10DBS 155130/1
160	130	25,4	9,52	152,6	157,5		a	15DBSE 160130	10DBS 160130
	130	25,4	6,35	153	157,5		a		10DBS 160130/1
	135	25,4	9,52	152,6	157,5		a	15DBSE 160135	10DBS 160135
	135	32	10	154	158	•	a		10DBS 160135/ISO
	138	26,5	5,1	156	159		a	15DBSE 160138/M	10DBS 160138/M
	140	25	6,3	155	158	•	a		10DBS 160140/ISO
160	143	26,5	7,2	156	159,4		b		10DBS 160143/SI
165	140	25,4	9,52	157,6	162,5		a	15DBSE 165140	10DBS 165140
170	140	25,4	6,4	163	168		a		10DBS 170140
	145	25,4	12,7	161,72	167,1		a	15DBSE 170145	10DBS 170145
	148	26,5	5,1	166	169		a		10DBS 170148/M
175	150	25,4	12,7	166,72	172,1		a	15DBSE 175150	10DBS 175150

10DBS seals with diameters between 20 and 1500 mm can be manufactured within short delivery time.
For prices and availability: **www.all-tec-business.net**

Double acting piston seal with guide rings

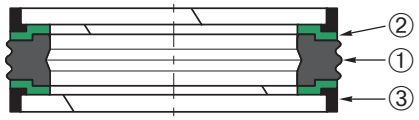

10DBS Profile a

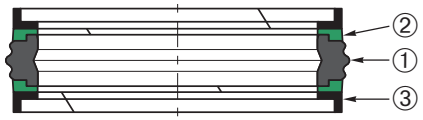

10DBS Profile b

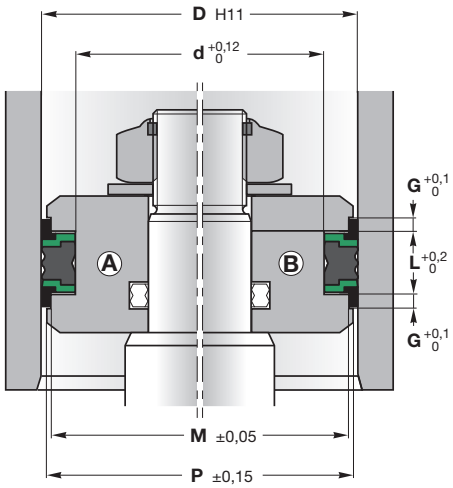

Machining of housings: see pages 48-49

10DBS piston seal is a double acting seal and guide element composed of a sealing rubber element, two anti-extrusion rings and two guide rings.

The rubber part has a low compression set which ensures good sealing performance. It is designed with three seal edges which share the load against the cylinder tube. The three seal edges also form two cavities which keep small quantities of fluid that **increase the service life**. The design of the static side provides a wide contact area and prevents distorsion inside the groove during installation.

The back-up rings prevent extrusion into the gap and **avoid the rotation** of the rubber part. The function of the guide rings is to guide the piston in the cylinder tube and to support radial load. This piston seal is available in different profiles depending on the existing installation groove.

Operating conditions	**see page 8**
Pressure	≤ 35 MPa
Temperature	-30°C to 100°C
Speed	≤ 0,5 m/s
Fluids	**see pages 22-45**

Materials	**see pages 10-19**
Seal ①	NBR2475 or NBR3470
Anti-extrusion rings ②	TPE63
Guide rings ③	POM/GF1

Assembly	**see pages 54-59**
On one-piece pistons Ⓐ	
On two-piece pistons Ⓑ	

Advantages

- Efficient sealing at high and low pressure
- Easy installation on monobloc pistons
- Guiding and sealing are performed by the seal
- Good results with drawn tubes
- Simple design for one piece pistons

Please contact us for applications approaching maximum values.

More information

On **www.all-tec-business.net**, click first on the reference and then on the material code to obtain the data sheet of the different materials.

For special requirements (fluid, temperature, pressure, speed...) or applications approaching maximum values, please contact us. Other materials available: **FPM**, **HNBR**, **TNBR**, **EPDM**...

11DBS...FPM page 487 **10DBS/I**: Inch dimensions page 489

D	d	L	G	M	P	ISO 6547	Profile 10DBS	Alternative reference	Reference
180	150	35,4	6,35	172,95	177,87		a	15DBSE 180150	10DBS 180150
	155	25,4	12,7	171,72	177,1		a	15DBSE 180155	10DBS 180155
	158	26,5	5,1	176	179		a		10DBS 180158/M
185	160	25,4	12,7	176,72	182,1		a	15DBSE 185160	10DBS 185160
190	165	25,4	12,7	181,72	187,05		a	15DBSE 190165	10DBS 190165
195	170	25,4	12,7	186,72	192,05		a		10DBS 195170
200	170	35,4	6,35	192,96	197,84		a	15DBSE 200170	10DBS 200170
	170	36	12,5	192	197	•	a		10DBS 200170/ISO
	175	25,4	12,7	191,62	197		a	15DBSE 200175	10DBS 200175
	175	31,5	6,6	196	199		a	15DBSE 200175/M	10DBS 200175/M
	180	31,5	9,2	196	199,4		b		10DBS 200180/SI
210	185	25,4	12,7	201,62	207		a		10DBS 210185
220	190	35,4	6,35	212,7	217,9		a	15DBSE 220190	10DBS 220190
	195	25,4	12,7	211,62	217		a	15DBSE 220195	10DBS 220195
225	200	25,4	12,7	216,62	222		a		10DBS 225200
230	205	25,4	12,7	221,62	227		a		10DBS 230205
240	215	25,4	12,7	231,62	237		a		10DBS 240215
250	220	35,4	6,35	242,9	247,85		a	15DBSE 250220	10DBS 250220
	225	25,4	12,7	241,62	247		a	15DBSE 250225	10DBS 250225
280	250	35,4	9,52	272,9	277		a		10DBS 280250
320	290	36	12,5	312	317	•	a		10DBS 320290/ISO

10DBS seals with diameters between 20 and 1500 mm can be manufactured within short delivery time.
For prices and availability: **www.all-tec-business.net**

FPM double acting piston seal with guide rings

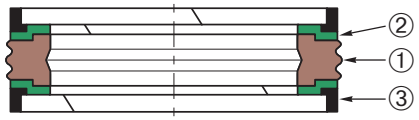

11DBS...FPM

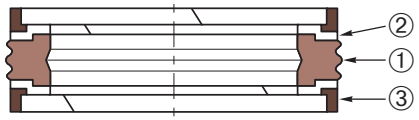

11DBS...FPM/PT

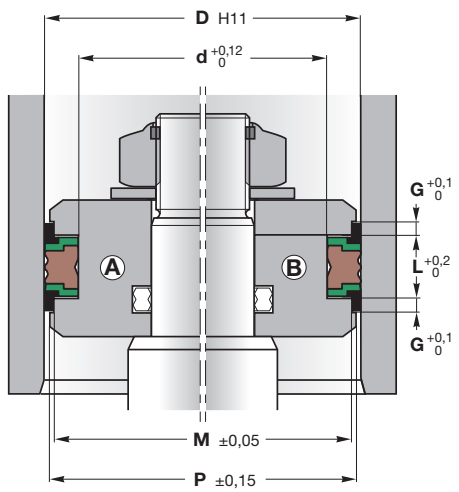

Machining of housings: see pages 48-49

More information

On **www.all-tec-business.net**, click first on the reference and then on the material code to obtain the data sheet of the different materials.

11DBS.../FPM is especially suitable for applications where there is contact with aggressive fuels and chemicals.

The piston seal **11DBS.../FPM** is a double acting seal and guide element composed of a FPM sealing element, two TPE anti-extrusion rings and two POM guide rings.

The piston seal **11DBS.../FPM/PT** is a double acting seal and guide element composed of a FPM sealing element, two PTFE virgin anti-extrusion rings and two PTFE bronze guide rings.

The sealing ring has a low compression set which ensures good sealing performance. It is designed with three seal edges which share the load against the cylinder tube. The three seal edges also form two cavities which keep small quantities of fluid that **increase the service life**. The design of the static side provides a wide contact area and prevents distorsion inside the groove during installation.

The back-up rings prevent extrusion into the gap and **avoid the rotation** of the rubber part. The function of the guide rings is to guide the piston in the cylinder tube and to support radial load. This piston seal is available in different profiles depending on the existing installation groove.

Operating conditions	**see page 8**
Pressure	≤ 35 MPa
Temperature	
11DBS...FPM	-10°C to 120°C
11DBS...FPM/PT	-10°C to 200°C
Speed	≤ 0,5 m/s
Fluids	**see pages 22-45**

Materials	**see pages 10-19**
Seal ①	FPM
Anti-extrusion rings ②	
11DBS...FPM	TPE63
11DBS...FPM/PT	PT01
Guide rings ③	
11DBS...FPM	POM/GF1
11DBS...FPM/PT	PT55

Assembly	**see pages 54-59**
On one-piece pistons Ⓐ	
On two-piece pistons Ⓑ	

Advantages

- Excellent resistance to chemical agents for 11DBS...FPM/PT
- Large temperature range for 11DBS...FPM/PT
- Efficient sealing at high and low pressure
- Easy installation on monobloc pistons
- Guiding and sealing are performed by the seal
- Good results with drawn tubes
- Simple design for one piece pistons

Please contact us for applications approaching maximum values.

For special requirements (fluid, temperature, pressure, speed...) or applications approaching maximum values, please contact us. Other materials available: **FPM**, **HNBR**, **TNBR**, **EPDM**...

10DBS/I: Inch dimensions page 489

11DBS...FPM

D	d	L	G	M	P	Reference
40	30	16,4	6,35	35,4	38,5	**11DBS 4030 FPM**
50	34	18,4	6,35	45,41	48,66	**11DBS 5034 FPM**
60	44	18,4	6,35	55,39	58,65	**11DBS 6044 FPM**
63	47	18,4	6,35	58,39	61,63	**11DBS 6347 FPM**
70	50	22,4	6,35	64,18	68,34	**11DBS 7050 FPM**
80	60	22,4	6,35	74,16	78,34	**11DBS 8060 FPM**
90	70	22,4	6,35	84,15	88,31	**11DBS 9070 FPM**
100	75	22,4	6,35	93,14	98,05	**11DBS 10075 FPM**
110	85	22,4	6,35	103,1	108	**11DBS 11085 FPM**

11DBS...FPM/PT

D	d	L	G	M	P	Reference
40	30	16,4	6,35	35,4	38,5	**11DBS 4030 FPM/PT**
50	34	18,4	6,35	45,41	48,66	**11DBS 5034 FPM/PT**
60	44	18,4	6,35	55,39	58,65	**11DBS 6044 FPM/PT**
63	47	18,4	6,35	58,39	61,63	**11DBS 6347 FPM/PT**
70	50	22,4	6,35	64,18	68,34	**11DBS 7050 FPM/PT**
80	60	22,4	6,35	74,16	78,34	**11DBS 8060 FPM/PT**
90	70	22,4	6,35	84,15	88,31	**11DBS 9070 FPM/PT**
100	75	22,4	6,35	93,14	98,05	**11DBS 10075 FPM/PT**

11DBS...FPM/PT seals with diameters between 20 and 1500 mm can be manufactured within short delivery time.
For prices and availability: **www.all-tec-business.net**

Double acting piston seal with guide rings
Inch dimensions

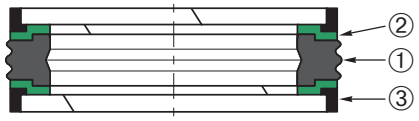

10DBS/I

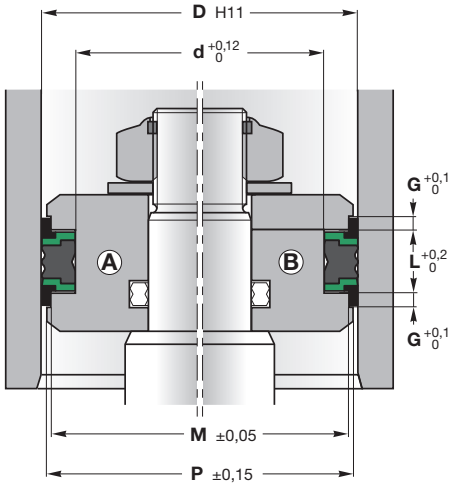

Machining of housings: see pages 48-49

10DBS/I piston seal is a double acting seal and guide element composed of a sealing rubber element, two anti-extrusion rings and two guide rings.

The rubber part has a low compression set which ensures good sealing performance. It is designed with three seal edges which share the load against the cylinder tube. The three seal edges also form two cavities which keep small quantities of fluid that **increase the service life**. The design of the static side provides a wide contact area and prevents distorsion inside the groove during installation.

The back-up rings prevent extrusion into the gap and **avoid the rotation** of the rubber part. The function of the guide rings is to guide the piston in the cylinder tube and to support radial load. This piston seal is available in different profiles depending on the existing installation groove.

Operating conditions	**see page 8**
Pressure	≤ 35 MPa
Temperature	-30°C to 100°C
Speed	≤ 0,5 m/s
Fluids	**see pages 22-45**

Materials	**see pages 10-19**
Seal ①	NBR
Anti-extrusion rings ②	Polyester resin
Guide rings ③	Acetal resin

Assembly	**see pages 54-59**
On one-piece pistons Ⓐ	
On two-piece pistons Ⓑ	

Advantages

- Efficient sealing at high and low pressure
- Easy installation on monobloc pistons
- Guiding and sealing are performed by the seal
- Good results with drawn tubes
- Simple design for one-piece pistons

Please contact us for applications approaching maximum values.

More information

On **www.all-tec-business.net**, click first on the reference and then on the material code to obtain the data sheet of the different materials.

ALL-TEC SEALING SYSTEMS

Inch dimensions

D	d	L	G	M	P	Reference
38,1	25,4	15,87	6,35	34,54	37,08	**10DBS/I 150100**
44,45	28,57	19,05	6,35	39,87	43,12	**10DBS/I 175112**
50,8	34,92	19,05	6,35	46,23	49,48	**10DBS/I 200137**
50,8	41,27	11,1	3,81	46,27	49,19	**10DBS/I 200162**
53,97	38,1	19,05	6,35	49,4	52,7	**10DBS/I 212150**
57,15	41,28	19,05	6,35	52,55	55,8	**10DBS/I 225162**
60,32	44,45	19,05	6,35	55,73	58,98	**10DBS/I 237175**
63,5	47,62	19,05	6,35	58,9	62,12	**10DBS/I 250187**
63,5	53,97	11,1	3,8	59	62,12	**10DBS/I 250212**
66,67	50,8	19,05	6,35	62,1	65,27	**10DBS/I 262200**
69,85	50,8	23,8	6,35	64,06	68,2	**10DBS/I 275200**
69,85	57,15	16,51	6,35	65,23	68,83	**10DBS/I 275225**
76,2	57,15	23,8	6,35	70,4	74,5	**10DBS/I 300225**
82,55	63,5	23,8	6,35	76,73	80,87	**10DBS/I 325250**
88,9	69,85	23,8	6,35	83,08	87,22	**10DBS/I 350275**
95,25	76,2	23,8	6,35	89,41	93,55	**10DBS/I 375300**
101,6	82,55	23,8	6,35	95,76	99,9	**10DBS/I 400325**
114,3	88,9	31,75	6,35	107,42	112,32	**10DBS/I 450350**
127	101,6	31,75	9,53	119,61	124,51	**10DBS/I 500400**
152,4	127	31,75	9,52	145	149,91	**10DBS/I 600500**
165,1	139,7	31,75	6,35	157,82	162,6	**10DBS/I 650550**
165,1	139,7	31,75	9,52	157,82	162,6	**10DBS/I 650550/1**
177,8	152,4	31,75	9,52	170,51	175,52	**10DBS/I 700600**
203,2	177,8	31,75	9,52	196,16	201,18	**10DBS/I 800700**

For special requirements (fluid, temperature, pressure, speed...) or applications approaching maximum values, please contact us. Other materials available: **FPM**, **HNBR**, **TNBR**, **EPDM**...

10DBS/I seals with diameters between 20 and 1500 mm can be manufactured within short delivery time.
For prices and availability: **www.all-tec-business.net**

Double acting piston seal with guide rings

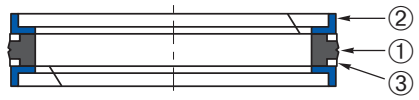

10DCS

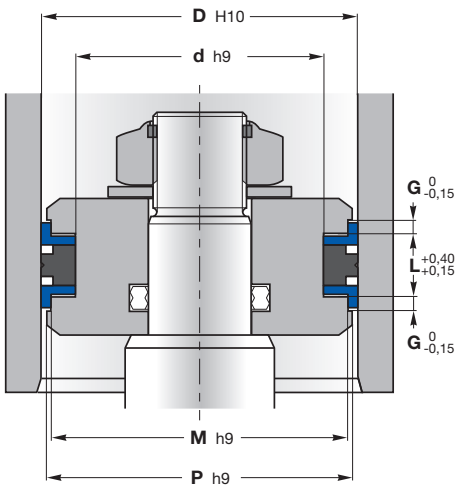

Machining of housings: see pages 48-49

10DCS piston seal is a double acting seal and guide element composed of a sealing rubber element, two endless anti-extrusion rings and two guide rings. This piston seal is designed for one piece pistons.

The back-up rings are fitted on the outside diameter of the rubber part and **prevent extrusion** into the gap. The function of the guide rings is to guide the piston in the cylinder tube and to support radial load.

Operating conditions	**see page 8**
Pressure	≤ 25 MPa
Temperature	-30°C to 100°C
Speed	≤ 0,5 m/s
Fluids	**see pages 22-45**

Materials	**see pages 10-19**
Seal ①	NBR
Guide rings ②	Acetal resin
Anti-extrusion rings ③	PTFE

Assembly	**see pages 54-59**
On one-piece pistons	

Advantages

- Efficient sealing at high and low pressure
- Easy installation on monobloc pistons
- Very compact groove dimensions

Please contact us for applications approaching maximum values.

More information

On **www.all-tec-business.net**, click first on the reference and then on the material code to obtain the data sheet of the different materials.

For special requirements (fluid, temperature, pressure, speed...) or applications approaching maximum values, please contact us. Other materials available: **FPM**, **HNBR**, **TNBR**, **EPDM**...

D	d	L	G	M	P	Reference
25	17,5	8,5	3,25	21,3	24	**10DCS 2517**
32	22	11	4	27,5	31	**10DCS 3222**
40	30	11	4	35,5	39	**10DCS 4030**
50	40	11	4	45,5	49	**10DCS 5040**
55	45	11	4	50,5	54	**10DCS 5545**
63	53	11	4	58,5	61,5	**10DCS 6353**
80	70	11	4	75,5	78,5	**10DCS 8070**
100	87	14	6	93,8	98,5	**10DCS 10087**
125	112	14	6	118,8	123,5	**10DCS 125112**

10DCS seals with diameters between 20 and 1500 mm can be manufactured within short delivery time.
For prices and availability: **www.all-tec-business.net**

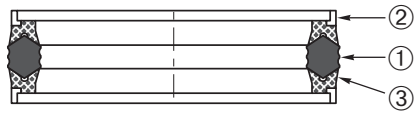

10DSM

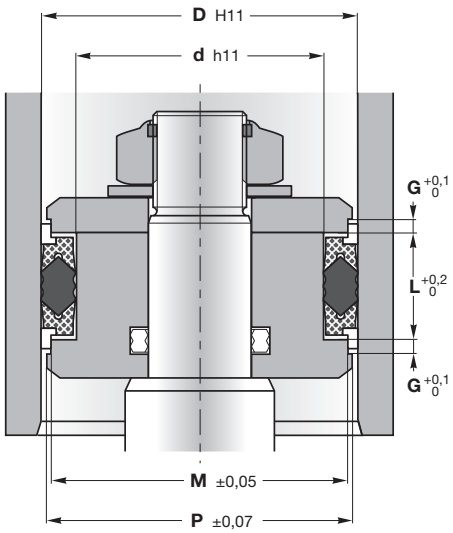

Machining of housings: see pages 48-49

10DSM piston seal has been created for high pressure working cylinders. The main sealing element has a low compression set and is designed with seal edges which share the load against the cylinder tube and ensure good sealing performance.

This seal edges also form cavities which keep small quantities of fluid that **reduce friction and wear**. The two support rings are made of cotton fabric reinforced nitrile elastomer. The U-ring is energised when pressure is applied. The guide rings support radial load and also have the function of anti-extrusion rings.

The **Selemaster** is suitable for applications working at high pressures and subjected to severe loading and vibration conditions.

Operating conditions	**see page 8**
Pressure	≤ 70 MPa
Temperature	-40°C to 130°C
Speed	≤ 0,5 m/s
Fluids	**see pages 22-45**

Materials	**see pages 10-19**
Seal ①	N8T60 (NBR)
Guide rings ②	PO0WC
Support rings ③	N8T60-C

Assembly	**see pages 54-59**
On two-piece pistons	

Advantages

- Efficient sealing at severe working conditions (vibration and shock loading)
- High resistance against extrusion
- High sealing efficiency

Please contact us for applications approaching maximum values.

More information

On **www.all-tec-business.net**, click first on the reference and then on the material code to obtain the data sheet of the different materials.

For special requirements (fluid, temperature, pressure, speed...) or applications approaching maximum values, please contact us. Other materials available: **FPM**, **HNBR**, **TNBR**, **EPDM**...

D	d	L	G	M	P	Alternative reference	Reference
45	29	32	6,35	38,8	42,85		**10DSM 177114/1A**
50	34	32	6,35	43,77	47,85		**10DSM 196133/1A**
55	40	32	6,35	48,77	52,85	**15DSME 5540/1A**	**10DSM 216157/1A**
60	44	32	6,35	53,8	57,8		**10DSM 236173/1A**
65	49	32	6,35	58,7	62,8		**10DSM 255192/1A**
70	50	35	9,52	62,62	67,54	**15DSME 7050/1A**	**10DSM 275196/1A**
75	55	35	9,52	67,7	72,54		**10DSM 295216/1A**
80	60	35	9,52	72,62	77,52	**15DSME 8060/1A**	**10DSM 314236/1A**
80	64	32	9,52	72,62	77,52		**10DSM 314251/1A**
85	65	35	9,52	77,62	82,54		**10DSM 334255/1A**
90	70	35	9,52	82,58	87,79	**15DSME 9070/1A**	**10DSM 354275/1A**
95	75	35	9,52	87,6	92,5		**10DSM 374295/1A**
100	80	35	9,52	92,6	97,5	**15DSME 10080/1A**	**10DSM 393314/1A**
101,6	82,55	34,92	9,52	94,2	99,1		**10DSM 400325/1A**
110	85	45	12,7	101,82	107,33	**15DSME 11085/1A**	**10DSM 433334/1A**
110	90	35	9,52	102,7	107,51		**10DSM 433354/1A**
120	95	45	12,7	111,82	117,33	**15DSME 12095/1A**	**10DSM 472374/1A**
120	100	35	9,52	112,8	117,51	**15DSME 120100/1A**	**10DSM 472393/1A**
125	100	45	12,7	116,82	122,33	**15DSME 125100/1A**	**10DSM 492393/1A**
130	105	45	12,7	121,82	127,33		**10DSM 511413/1A**
130	110	35	9,52	122,7	127,33		**10DSM 511433/1A**
135	110	45	12,7	126,82	132,33		**10DSM 531433/1A**
140	115	45	12,7	131,72	137,3	**15DSME 140115/1A**	**10DSM 551452/1A**
140	120	35	9,52	132,7	137,3	**15DSME 140120/1A**	**10DSM 551472/1A**
150	125	45	12,7	141,72	147,3	**15DSME 150125/1A**	**10DSM 590492/1A**
152,4	127	44,45	12,7	144,15	149,7		**10DSM 600500/1A**
160	135	45	12,7	151,72	157,1	**15DSME 160135/1A**	**10DSM 629531/1A**
165	135	45	12,7	158	162,1		**10DSM 649531/1A**
170	140	45	12,7	163	167,87	**15DSME 170140/1A**	**10DSM 669551/1A**
180	155	45	12,7	171,6	177,1	**15DSME 180155/1A**	**10DSM 708610/1A**
185	160	45	12,7	176,72	182,1		**10DSM 728629/1A**
190	165	45	12,7	181,72	187,1	**15DSME 190165/1A**	**10DSM 748649/1A**
200	175	45	12,7	191,72	197,1	**15DSME 200175/1A**	**10DSM 787688/1A**
210	185	45	12,7	201,6	207,1		**10DSM 826728/1A**
220	195	45	12,7	211,6	217,1	**15DSME 220195/1A**	**10DSM 866767/1A**
230	205	45	12,7	221,72	227,1		**10DSM 905807/1A**
240	215	45	12,7	231,72	237,1		**10DSM 944846/1A**
250	225	45	12,7	241,72	247,1	**15DSME 250225/1A**	**10DSM 984886/1A**
260	235	45	12,7	251,72	257,1	**15DSME 260235/1A**	**10DSM 1024925/1A**
270	245	45	12,7	261,72	267,1		**10DSM 1062965/1A**
280	255	45	12,7	271,72	277,1	**15DSME 280255/1A**	**10DSM 11021004/1A**
290	265	45	12,7	281,72	287,1		**10DSM 11411043/1A**
300	275	45	12,7	291,72	297,1	**15DSME 300275/1A**	**10DSM 11811082/1A**
360	335	44,5	12,7	351,76	357,33		**10DSM 14171318/1A**
380	355	45	12,7	371,75	377,33		**10DSM 14961397/1A**

10DSM seals with diameters between 20 and 1500 mm can be manufactured within short delivery time.
For prices and availability: **www.all-tec-business.net**

Fabric reinforced NBR piston seal with guide rings

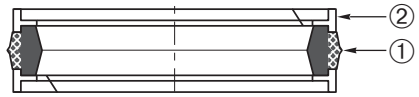

10DPS

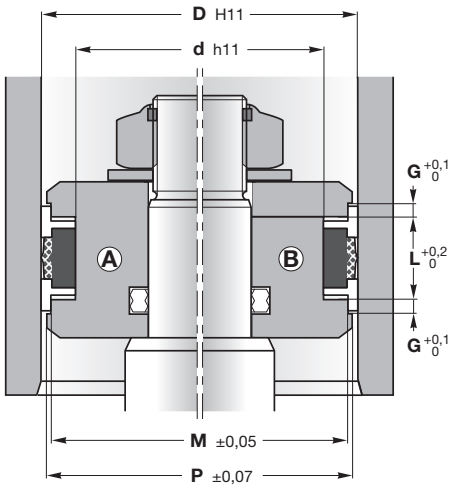

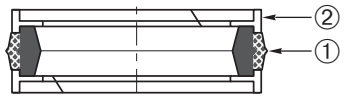

10DPS.../SI

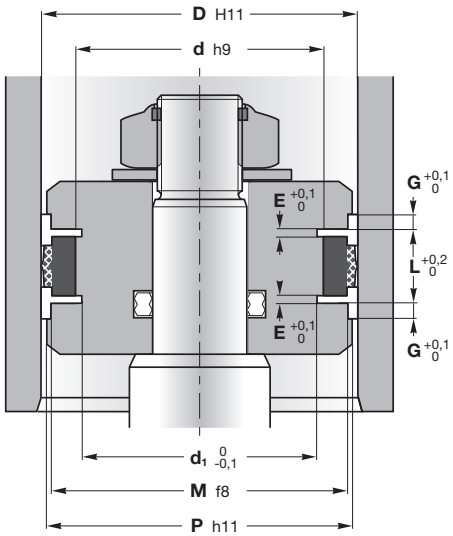

Machining of housings: see pages 48-49

10DPS is a double acting piston seal and guide element composed of a sealing rubber reinforced element and two guide rings. The dynamic side of the rubber part is fabric reinforced (fabric reinforced nitrile elastomer has a higher mechanical strength and better lubricating properties).

The section of the seal has been reduced **to optimise** its installation in closed grooves.

Operating conditions	see page 8
Pressure	≤ 35 MPa
Temperature	-30°C to 130°C
Speed	≤ 0,5 m/s
Fluids	see pages 22-45

Materials	see pages 10-19
Seal ①	N8T60-C/N8T60
Guide rings ②	PO0WC

Assembly	see pages 54-59
On one-piece pistons Ⓐ	
On two-piece pistons Ⓑ	

Advantages

- Good sealing effect
- Compact groove dimensions
- Guiding and sealing are performed by the seal
- Low friction

Please contact us for applications approaching maximum values.

More information

On **www.all-tec-business.net**, click first on the reference and then on the material code to obtain the data sheet of the different materials.

For special requirements (fluid, temperature, pressure, speed...) or applications approaching maximum values, please contact us. Other materials available: **FPM**, **HNBR**, **TNBR**, **EPDM**...

11DPS...FPM page 497

D	d	L	G	M	P	d1	E	Alternative reference	Reference
25	17	10	4	22	24				**10DPS 2517-1**
25	17	13,5	3,2	21	24,4	14	2,1		**10DPS 2517/SI**
30	22	13,5	3,2	26	29,4	19	2,1	**15DPSE 3022/SI**	**10DPS 3022/SI**
32	24	15,5	3,2	28	31,4				**10DPS 3224**
32	24	10	4	29	31				**10DPS 3224-1**
32	24	15,5	3,2	28	31,4	21	3,1	**15DPSE 3224/SI**	**10DPS 3224/SI**
35	27	15,5	3,2	31	34,4				**10DPS 3527**
35	27	15,5	3,2	31	34,4	24	3,1	**15DPSE 3527/SI**	**10DPS 3527/SI**
40	32	15,5	3,2	36	39,4				**10DPS 4032**
40	32	10	4	37	39				**10DPS 4032-1**
40	32	15,5	3,2	36	39,4	29	3,1	**15DPSE 4032/SI**	**10DPS 4032/SI**
45	37	15,5	3,2	41	44,4				**10DPS 4537**
45	37	15,5	3,2	41	44,4	34	3,1	**15DPSE 4537/SI**	**10DPS 4537/SI**
50	38	20,5	4,2	46	49,4			**15DPSE 5038**	**10DPS 5038**
50	40	12,5	4	47	49				**10DPS 5040-1**
55	43	20,5	4,2	51	54,4			**15DPSE 5543**	**10DPS 5543**
60	48	20,5	4,2	56	59,4			**15DPSE 6048**	**10DPS 6048**
63	51	20,5	4,2	59	62,4			**15DPSE 6351**	**10DPS 6351**
63	53	12,5	4	60	62				**10DPS 6353-1**
65	53	20,5	4,2	61	64,4				**10DPS 6553**
70	58	20,5	4,2	66	69,4			**15DPSE 7058**	**10DPS 7058**
75	63	20,5	4,2	71	74,4			**15DPSE 7563**	**10DPS 7563**
80	65	20	5	76	78,5			**15DPSE 8065-1**	**10DPS 8065-1**
80	66	22,5	5,2	76	79,4			**15DPSE 8066**	**10DPS 8066**
85	71	22,5	5,2	81	84,4			**15DPSE 8571**	**10DPS 8571**
90	76	22,5	5,2	86	89,4			**15DPSE 9076**	**10DPS 9076**
100	85	20	5	96	98,5				**10DPS 10085-1**
100	86	22,5	5,2	96	99,4			**15DPSE 10086**	**10DPS 10086**
110	96	22,5	5,2	106	109,4			**15DPSE 11096**	**10DPS 11096**
115	101	22,5	5,2	111	114,4				**10DPS 115101**
120	106	22,5	5,2	116	119,4			**15DPSE 120106**	**10DPS 120106**
125	105	25	6,3	120	123				**10DPS 125105-1**
125	108	26,5	7,2	121	124,4			**15DPSE 125108**	**10DPS 125108**
140	120	25	6,3	135	138				**10DPS 140120-1**
140	123	26,5	7,2	136	139,4			**15DPSE 140123**	**10DPS 140123**
150	133	26,5	7,2	146	149,4				**10DPS 150133**
160	140	25	6,3	155	158			**15DPSE 160140-1**	**10DPS 160140-1**
160	143	26,5	7,2	156	159,4			**15DPSE 160143**	**10DPS 160143**
180	163	26,5	7,2	176	179,4			**15DPSE 180163**	**10DPS 180163**
200	180	31,5	9,2	196	199,4			**15DPSE 200180**	**10DPS 200180**
220	200	31,5	9,2	216	219,4			**15DPSE 220200**	**10DPS 220200**
250	230	31,5	9,2	246	249,4			**15DPSE 250230**	**10DPS 250230**

10DPS seals with diameters between 20 and 1500 mm can be manufactured within short delivery time.
For prices and availability: **www.all-tec-business.net**

FPM-C piston seal with guide rings

11DPS...FPM-C

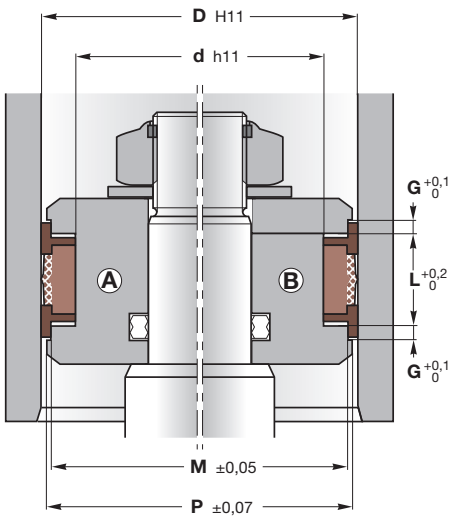

Machining of housings: see pages 48-49

11DPS.../FPM-C is a double acting piston seal and guide element composed of a sealing rubber reinforced element and two guide rings. The dynamic side of the rubber part is fabric reinforced (fabric reinforced fluoro elastomer has a higher mechanical strength and better lubricating properties).

The section of the seal has been reduced to optimise its installation in closed grooves. The **11DPS.../FPM-C** is especially suitable for applications where there is contact with aggressive fuels and chemicals or at high temperature up to 150°C.

Operating conditions	**see page 8**
Pressure	≤ 35 MPa
Temperature	-10°C to 150°C
Speed	≤ 0,5 m/s
Fluids	**see pages 22-45**

Materials	**see pages 10-19**
Seal ①	FPM8580/FPM8471-C
Guide rings ②	PTFE + bronze

Assembly	**see pages 54-59**
On one-piece pistons Ⓐ	
On two-piece pistons Ⓑ	

Advantages

- Good sealing effect
- Compact groove dimensions
- Guiding and sealing are performed by the seal
- Low friction
- High chemical compatibility
- Up to 150°C

Please contact us for applications approaching maximum values.

More information

On **www.all-tec-business.net**, click first on the reference and then on the material code to obtain the data sheet of the different materials.

ALL-TEC® SEALING SYSTEMS

FPM seals						
D	**d**	**L**	**G**	**M**	**P**	**Reference**
50	38	20,5	4,2	46	49,4	**11DPS 5038 FPM-C**
	40	12,5	4	47	49	**11DPS 5040-1 FPM-C**
60	48	20,5	4,2	56	59,4	**11DPS 6048 FPM-C**
63	51	20,5	4,2	59	62,4	**11DPS 6351 FPM-C**
80	65	20	5	76	78,5	**11DPS 8065-1 FPM-C**
	66	22,5	5,2	76	79,4	**11DPS 8066 FPM-C**
100	86	22,5	5,2	96	99,4	**11DPS 10086 FPM-C**
125	108	26,5	7,2	121	124,4	**11DPS 125108 FPM-C**
140	123	26,5	7,2	136	139,4	**11DPS 140123 FPM-C**

For special requirements (fluid, temperature, pressure, speed...) or applications approaching maximum values, please contact us. Other materials available: **FPM**, **HNBR**, **TNBR**, **EPDM**...

11DPS...FPM-C seals with diameters between 20 and 1500 mm can be manufactured within short delivery time.
For prices and availability: **www.all-tec-business.net**

10D11W

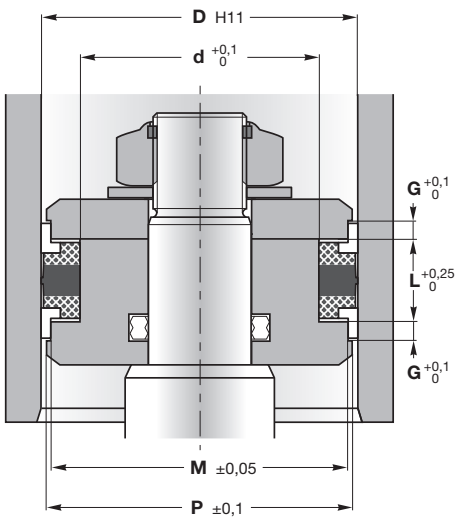

Machining of housings: see pages 48-49

10D11W is a double acting seal and guide element composed of a sealing rubber reinforced element and two guide rings. It has been designed for a use on high pressure working split pistons.

The fabric reinforced part of the rubber is on both side of the seal. The guide rings are fitted on the outside diameter of the reinforcement and prevent extrusion into the gap.

The acetal resin guide rings also support the piston head under side load conditions thus **preventing metal to metal contact**. The rubber fabric allows a higher mechanical strength, reduce friction and wear.

Operating conditions	**see page 8**
Pressure	≤ 50 MPa
Temperature	-30°C to 100°C
Speed	≤ 0,5 m/s
Fluids	**see pages 22-45**

Materials	**see pages 10-19**
Seal ①	N8T60/N8T60-C
Guide rings ②	PO0WC

Assembly	**see pages 54-59**
On two-piece pistons	

Advantages

- Efficient sealing at high and low pressure
- High pressure
- Good price-performance ratio
- High resistance against extrusion

Please contact us for applications approaching maximum values.

More information

On **www.all-tec-business.net**, click first on the reference and then on the material code to obtain the data sheet of the different materials.

D	d	L	G	M	P	Alternative reference	Reference
38,1	25,4	16,27	6,35	34,54	37,05		**10D11W 150100**
44,45	28,57	19,05	6,35	39,87	43,14		**10D11W 175112**
50,8	34,92	19,45	6,35	46,22	49,5		**10D11W 200137**
53,97	38,1	19,05	6,35	49,37	52,68		**10D11W 212150**
57,15	41,27	19,45	6,35	52,55	55,8		**10D11W 225162**
60,32	44,45	19,05	6,35	55,72	58,38		**10D11W 237175**
63	47	19,4	6,35	58,4	61,65	**15D11WE 6347**	**10D11W 248185**
63,5	47,62	19,45	6,35	58,9	62,13		**10D11W 250187**
69,85	50,8	23,8	6,35	64,05	68,2		**10D11W 275200**
76,2	57,15	23,8	6,35	70,4	74,55		**10D11W 300225**
82,55	63,5	24,21	6,35	76,73	80,9		**10D11W 325250**
88,9	69,85	24,21	6,35	83,08	87,22		**10D11W 350275**
90	70	25,4	6,35	84,15	88,3		**10D11W 354275/1**
101,6	82,55	23,8	6,35	95,76	99,9		**10D11W 400325**
105	80	22,4	6,35	98,1	103		**10D11W 413314**
107,95	88,9	23,8	6,35	102,08	106,23		**10D11W 425350**
110	85	25,4	6,35	103,1	108		**10D11W 433334**
110	90	25,4	6,35	104,15	108,3	**15D11WE 11090**	**10D11W 433354**
114,3	88,9	32,15	6,35	107,42	112,33		**10D11W 450350**
115	90	22,4	6,35	108,1	113	**15D11WE 11590**	**10D11W 452354**
120,65	95,25	31,75	6,35	113,74	118,65		**10D11W 475375**
125	100	25,4	6,35	118,1	123		**10D11W 492393**
125	105	25,4	6,35	119,15	123,3		**10D11W 492413**
127	101,6	32,15	6,35	120,09	124,98		**10D11W 500400**
133,35	107,95	31,75	6,35	126,42	131,3		**10D11W 525425**
135	110	25,4	6,35	128,1	133		**10D11W 531433**
139,7	114,3	31,75	6,35	132,77	137,65		**10D11W 550450**
140	120	25,4	6,35	134,1	138,3		**10D11W 551472**
145	120	25,4	6,35	138,3	142,95		**10D11W 570472**
146,05	120,65	32,15	6,35	139,1	144		**10D11W 575475**
152,4	127	32,15	6,35	145,44	150,35		**10D11W 600500**
160	130	25,4	6,35	153	157,9	**15D11WE 160130**	**10D11W 629511**
165,1	139,7	32,15	6,35	158,12	163,01		**10D11W 650550**
177,8	152,4	31,75	6,35	170,8	175,7		**10D11W 700600**
180	150	35,4	6,35	172,95	177,87	**15D11WE 180150**	**10D11W 708590**
180	160	31,4	6,35	172,95	177,87		**10D11W 708629**
190	160	35,4	6,35	182,93	187,87	**15D11WE 190160**	**10D11W 748629**
200	170	35,4	6,35	192,96	197,84	**15D11WE 200170**	**10D11W 787669**
220	190	35,4	6,35	212,7	217,9	**15D11WE 220190**	**10D11W 866748**
250	220	35,4	6,35	242,9	247,86		**10D11W 984866**
300	270	35,4	6,35	292,9	297,86		**10D11W 11811062**

For special requirements (fluid, temperature, pressure, speed...) or applications approaching maximum values, please contact us. Other materials available: **FPM**, **HNBR**, **TNBR**, **EPDM**...

Fabric reinforced piston seal with guide rings

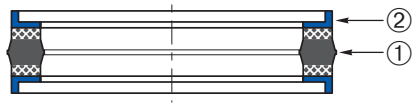

10D11W.../H

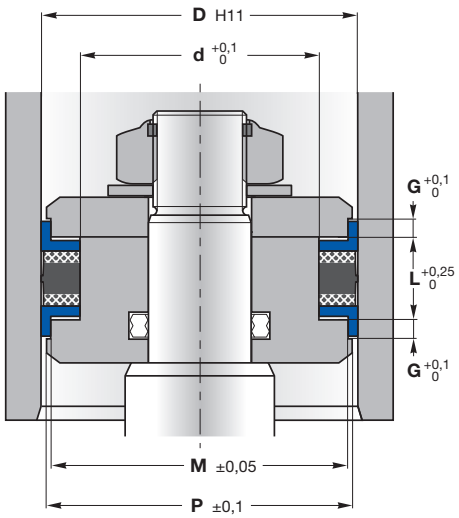

Machining of housings: see pages 48-49

10D11W.../H is a double acting seal and guide element composed of a sealing rubber reinforced element and two guide rings. It has been designed for a use on high pressure working split pistons. The fabric reinforced part of the rubber is on both side of the seal.

10D11W.../H is characterised by the long sided L-profiles of the guide rings and prevent extrusion into the gap. The polyacetal bearing rings also support the piston head under side load conditions thus preventing metal to metal contact. The rubber fabric allows a higher mechanical strength, reduce friction and wear.

Operating conditions	**see page 8**
Pressure	≤ 40 MPa
Temperature	-30°C to 100°C
Speed	≤ 0,5 m/s
Fluids	**see pages 22-45**

Materials	**see pages 10-19**
Seal ①	NBR with fabric reinforcement
Guide rings ②	Acetal resin

Assembly	**see pages 54-59**
On two-piece pistons	

Advantages

- Efficient sealing at high and low pressure
- High pressure
- Good price-performance ratio
- High resistance against extrusion

Please contact us for applications approaching maximum values.

More information

On **www.all-tec-business.net**, click first on the reference and then on the material code to obtain the data sheet of the different materials.

For special requirements (fluid, temperature, pressure, speed...) or applications approaching maximum values, please contact us. Other materials available: **FPM**, **HNBR**, **TNBR**, **EPDM**...

D	d	L	G	M	P	Reference
25	15	15,5	5	21,8	24	**10D11W 098059/H**
25,4	15,87	15,09	4,76	22,05	24,59	**10D11W 100062/H**
31,75	19,05	19,05	6,35	28,4	30,94	**10D11W 125075/H**
38,1	25,4	19,05	6,35	34,82	37,29	**10D11W 150100/H**
40	25	24	6	34,8	39	**10D11W 157098/H**
44,45	28,57	23,8	6,35	39,5	42,85	**10D11W 175112/H**
50	35	24	6	44,8	48,5	**10D11W 196137/H**
50,8	34,93	23,8	6,35	45,85	49,2	**10D11W 200137/H**
55	40	24	6	49,8	53,5	**10D11W 216157/H**
57,15	41,27	23,8	6,35	52,2	55,55	**10D11W 225162/H**
60	40	31	7	53,8	58,5	**10D11W 236157/H**
60,33	44,45	23,8	6,35	55,37	58,72	**10D11W 237175/H**
63	48	24	6	57,8	61,5	**10D11W 248188/H**
63,5	47,62	23,8	6,35	58,55	61,9	**10D11W 250187/H**
70	50	31	7	63,8	68	**10D11W 275196/H**
69,85	50,8	30,15	6,35	63,12	68,25	**10D11W 275200/H**
76,2	57,15	30,15	6,35	69,47	74,6	**10D11W 300225/H**
80	60	31	7	73,8	78	**10D11W 314236/H**
82,55	63,5	30,15	6,35	75,82	80,95	**10D11W 325250/H**
88,9	69,85	30,15	6,35	82,17	87,3	**10D11W 350275/H**
90	70	31	7	83,8	88	**10D11W 354275/H**
95,25	76,2	30,15	6,35	88,52	93,65	**10D11W 375300/H**
100	80	31	7	93,8	98	**10D11W 393314/H**
101,6	82,55	30,15	6,35	94,87	100	**10D11W 400325/H**
107,95	88,9	30,15	6,35	101,22	106,35	**10D11W 425350/H**
110	90	31	7	103,8	108	**10D11W 433354/H**
120	100	31	7	113,8	118	**10D11W 472393/H**
120,65	95,25	38,1	9,52	113,92	119,05	**10D11W 475375/H**
125	100	38	9,5	118,8	123	**10D11W 492393/H**
127	101,6	38,1	9,52	120,27	125,4	**10D11W 500400/H**
133,35	107,95	38,1	9,52	126,75	131,75	**10D11W 525425/H**
139,7	114,3	38,1	9,52	132,99	138,1	**10D11W 550450/H**
140	120	31	7	133,8	138	**10D11W 551472/H**
152,4	127	38,1	9,52	145,69	150,8	**10D11W 600500/H**
177,8	152,4	38,1	9,52	171,09	176,2	**10D11W 700600/H**

10D11W.../H seals with diameters between 20 and 1500 mm can be manufactured within short delivery time.
For prices and availability: **www.all-tec-business.net**

PU double acting piston seal with guide rings

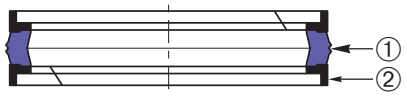

10EUD.../P

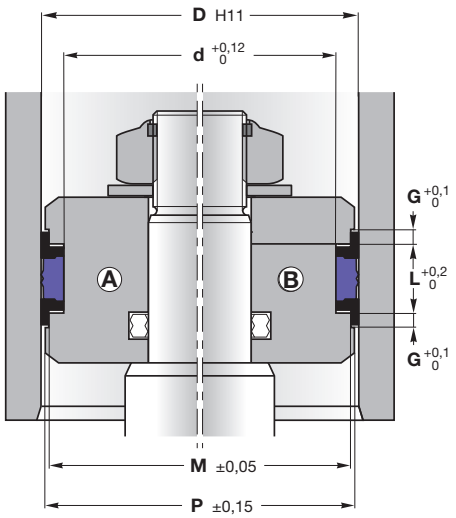

Machining of housings: see pages 48-49

10EUD.../P is a double acting seal and guide element composed of a polyurethane sealing element in the middle and two guide ring. Back-up rings are unnecessary thanks to the high extrusion resistance of the polyurethane.

The **special shaped polyurethane ring** reduces the friction and extends the service life of the seal.

Operating conditions	**see page 8**
Pressure	≤ 40 MPa
Temperature	-30°C to 100°C
Speed	≤ 0,5 m/s
Fluids	**see pages 22-45**

Materials	**see pages 10-19**
Dynamic sealing element ①	PU09
Guide rings ②	POM/GF1

Assembly	**see pages 54-59**
On one-piece pistons Ⓐ	
On two-piece pistons Ⓑ	

Advantages

- Efficient sealing at high and low pressure
- Excellent abrasion resistance
- Extended service life
- Easy to assemble on monobloc pistons
- Small sections

Please contact us for applications approaching maximum values.

More information

On **www.all-tec-business.net**, click first on the reference and then on the material code to obtain the data sheet of the different materials.

ALL-TEC® SEALING SYSTEMS

D	d	L	G	M	P	ISO 7425	Reference
25	15	12,5	4	22	24	•	**10EUD 2515/P**
	17	10	4	22	24	•	**10EUD 2517/P**
32	22	12,5	4	29	31	•	**10EUD 3222/P**
	24	10	4	29	31	•	**10EUD 3224/P**
40	30	10	5	36,5	39		**10EUD 4030/P**
	30	12,5	4	36	38	•	**10EUD 4030/P1**
	32	10	4	37	39	•	**10EUD 4032/P**
50	35	20	5	46	48,5	•	**10EUD 5035/P**
	40	12,5	4	47	49	•	**10EUD 5040/P**
55	45	12,5	4	52	54	•	**10EUD 5545/P**
63	48	20	5	59	62	•	**10EUD 6348/P**
	53	12,5	4	60	62	•	**10EUD 6353/P**
70	55	20	5	66	68,5	•	**10EUD 7055/P**
	60	12,5	4	67	69		**10EUD 7060/P**
80	65	20	5	76	78,5	•	**10EUD 8065/P**
	70	12,5	4	77	79		**10EUD 8070/P**
90	75	20	5	86	88,5	•	**10EUD 9075/P**
	80	12,5	5	86	88,5		**10EUD 9080/P**
100	85	20	5	96	98,5	•	**10EUD 10085/P**
	90	12,5	5	96	98,5		**10EUD 10090/P**
110	95	20	5	106	108,5	•	**10EUD 11095/P**

For special requirements (fluid, temperature, pressure, speed...) or applications approaching maximum values, please contact us. Other materials available: **FPM**, **HNBR**, **TNBR**, **EPDM**...

10EUD.../P seals with diameters between 20 and 1500 mm can be manufactured within short delivery time.
For prices and availability: **www.all-tec-business.net**

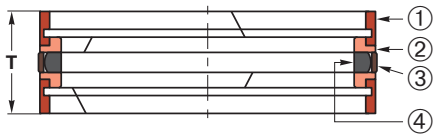

12GD1000K

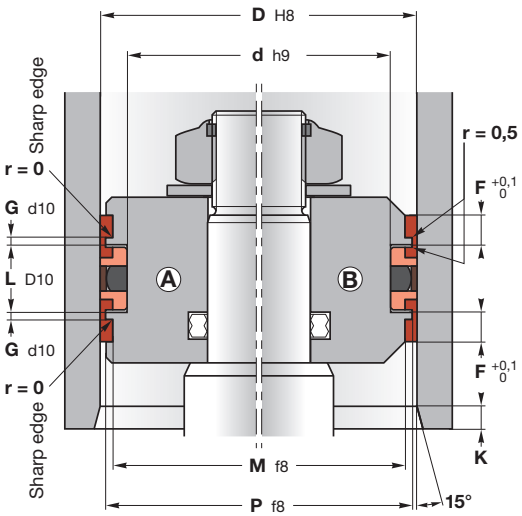

Machining of housings: see pages 48-49

More information

On **www.all-tec-business.net**, click first on the reference and then on the material code to obtain the data sheet of the different materials.

12GD1000K slide ring piston seal type is used to seal and guide pistons on double acting hydraulic cylinders. The seal design and materials used make it particularly suitable for the most vigorous applications e.g. construction machine cylinders.

The seal can be used in standard form with mineral oils and water base fluids. Modified versions are available for use with other fluids.

12GD1000K consists of 6 parts, a special shaped elastic ring of a modified NBR, a slide ring of abrasion resistant PTFE-Bronze compound which acts as the sealing ring, two lateral support rings of modified TPE and two bearing rings of pressure-resistant POM-PTFE-Bronze compound.

The elastic ring energises the slide ring to press it against the cylinder wall, providing a sealing function at zero working pressure. The onset of pressure compresses the elastic ring which increases the radial force pressing the slide ring against the cylinder wall, thereby **increasing the sealing effect**.

The two support rings prevent gap extrusion of the slide ring at **high pressures**. The special profile of the support rings encourages uniform fluid and pressure distribution to the elastic inner ring.

The bearing rings positioned on the support rings, make contact with the cylinder wall; there is **no metallic contact** between the piston and the cylinder tube.

Operating conditions	**see page 8**
Pressure	
Construction Ⓐ	≤ 63 MPa
Construction Ⓑ	≤ 36 MPa
Temperature	-30°C to 120°C
Speed	≤ 1 m/s
Fluids	**see pages 22-45**

Materials	**see pages 10-19**
Guide rings ①	POM-PTFE bronze compound
Anti-extrusion rings ②	
Ø 40 to 180 mm	TPE
> Ø 180 mm	POM or PA
Dynamic sealing element ③	PTFE-bronze
Energising element ④	NBR

Assembly	**see pages 54-59**
On one-piece pistons	

Advantages

- Efficient sealing at low and high pressures
- Compact seal
- Easy installation on monobloc pistons
- Excellent abrasion resistance
- Guiding and sealing are performed by the seal

Please contact us for applications approaching maximum values.

For special requirements (fluid, temperature, pressure, speed...) or applications approaching maximum values, please contact us. Other materials available: **FPM**, **HNBR**, **TNBR**, **EPDM**...

D	d	L	T	M	P	G	F	K	HUNGER reference	Reference
40	26	15,5	32	32	36	3,5	8,25	7	137690	12GD1000K 40
50	34	20,5	32	42	46	3	5,8	7	021900	12GD1000K 50/1
	34	20,5	39	42	46	3	9,25	7	137692	12GD1000K 50
63	47	20,5	32	55	59	3	5,8	7	021901	12GD1000K 63/1
	47	20,5	39	55	59	3	9,25	7	137694	12GD1000K 63
65	49	20,5	39	57	61	3	9,25	7	137695	12GD1000K 65
70	54	20,5	32	62	66	3	5,8	7	021902	12GD1000K 70/1
	54	20,5	39	62	66	3	9,25	7	137696	12GD1000K 70
80	62	22,5	36	72	76	3	6,8	7	021903	12GD1000K 80/1
	62	22,5	43	72	76	3	10,25	7	137698	12GD1000K 80
90	72	22,5	36	82	86	3	6,8	7	021904	12GD1000K 90/1
	72	22,5	43	82	86	3	10,25	7	137700	12GD1000K 90
100	82	22,5	36	92	96	3	6,8	7	021905	12GD1000K 100/1
	82	22,5	43	92	96	3	10,25	7	137702	12GD1000K 100
105	87	22,5	36	97	101	3	6,8	10	039216	12GD1000K 105/1
110	92	22,5	36	102	106	3	6,8	10	021906	12GD1000K 110/1
	92	22,5	43	102	106	3	10,25	10	137704	12GD1000K 110
115	97	22,5	36	107	111	3	6,8	10	021907	12GD1000K 115/1
	97	22,5	43	107	111	3	10,25	10	137705	12GD1000K 115
120	102	22,5	43	112	116	3	10,25	10	137706	12GD1000K 120
125	103	26,5	43	115	121	4	8,3	10	021909	12GD1000K 125/1
	103	26,5	53	115	121	4	13,25	10	137707	12GD1000K 125
130	108	26,5	43	120	126	4	8,3	10	021910	12GD1000K 130/1
140	118	26,5	43	130	136	4	8,3	10	021911	12GD1000K 140/1
	118	26,5	53	130	136	4	13,25	10	137710	12GD1000K 140
150	128	26,5	43	140	146	4	8,3	10	021912	12GD1000K 150/1
	128	26,5	53	140	146	4	13,25	10	137712	12GD1000K 150
160	138	26,5	43	150	156	4	8,3	10	021913	12GD1000K 160/1
	138	26,5	53	150	156	4	13,25	10	137714	12GD1000K 160
170	148	26,5	57	160	166	6	15,25	10	137715	12GD1000K 170
180	158	26,5	48	170	176	6	10,8	10	021915	12GD1000K 180/1
	158	26,5	57	170	176	6	15,25	10	137716	12GD1000K 180
190	165	31,5	48	180	186	4,5	8,3	10	038159	12GD1000K 190/1
200	175	31,5	48	190	196	4,5	8,3	10	021916	12GD1000K 200/1
	175	31,5	64	190	196	4,5	16,25	10	137718	12GD1000K 200

Further dimensions on request

12GD1000K seals with diameters between 20 and 1500 mm can be manufactured within short delivery time.
For prices and availability: **www.all-tec-business.net**

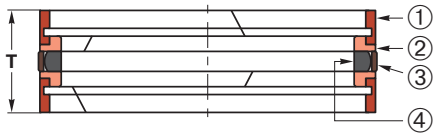

12GD1000K

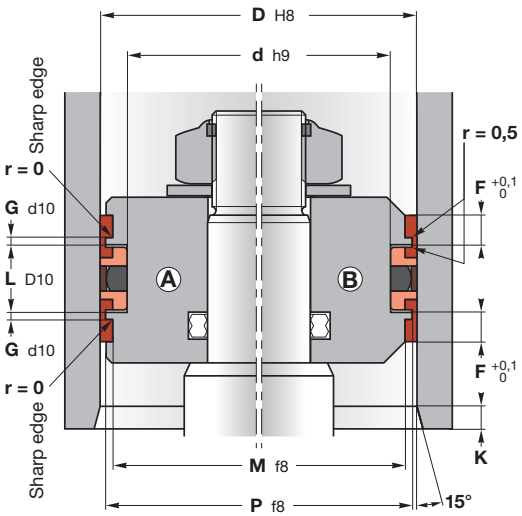

Machining of housings: see pages 48-49

More information

On **www.all-tec-business.net**, click first on the reference and then on the material code to obtain the data sheet of the different materials.

12GD1000K slide ring piston seal type is used to seal and guide pistons on double acting hydraulic cylinders. The seal design and materials used make it particularly suitable for the most vigorous applications e.g. construction machine cylinders.

The seal can be used in standard form with mineral oils and water base fluids. Modified versions are available for use with other fluids.

12GD1000K consists of 6 parts, a special shaped elastic ring of a modified NBR, a slide ring of abrasion resistant PTFE-Bronze compound which acts as the sealing ring, two lateral support rings of modified TPE and two bearing rings of pressure-resistant POM-PTFE-Bronze compound.

The elastic ring energises the slide ring to press it against the cylinder wall, providing a sealing function at zero working pressure. The onset of pressure compresses the elastic ring which increases the radial force pressing the slide ring against the cylinder wall, thereby **increasing the sealing effect**.

The two support rings prevent gap extrusion of the slide ring at **high pressures**. The special profile of the support rings encourages uniform fluid and pressure distribution to the elastic inner ring.

The bearing rings positioned on the support rings, make contact with the cylinder wall; there is **no metallic contact** between the piston and the cylinder tube.

Operating conditions	see page 8
Pressure	
Construction Ⓐ	≤ 63 MPa
Construction Ⓑ	≤ 36 MPa
Temperature	-30°C to 120°C
Speed	≤ 1 m/s
Fluids	see pages 22-45

Materials	see pages 10-19
Guide rings ①	POM-PTFE bronze compound
Anti-extrusion rings ②	
Ø 40 to 180 mm	TPE
> Ø 180 mm	POM or PA
Dynamic sealing element ③	PTFE-bronze
Energising element ④	NBR

Assembly	see pages 54-59
On one-piece pistons	

Advantages

- Efficient sealing at low and high pressures
- Compact seal
- Easy installation on monobloc pistons
- Excellent abrasion resistance
- Guiding and sealing are performed by the seal

Please contact us for applications approaching maximum values.

D	d	L	T	M	P	G	F	K	HUNGER reference	Reference
210	185	31,5	58	200	206	8	13,3	12	021917	12GD1000K 210/1
	185	31,5	71	200	206	8	19,75	12	137719	12GD1000K 210
220	195	31,5	58	210	216	8	13,3	12	021918	12GD1000K 220/1
	195	31,5	71	210	216	8	19,75	12	137720	12GD1000K 220
230	205	31,5	85	220	226	15	26,75	12	137722	12GD1000K 230
235	210	31,5	85	225	231	15	26,75	12	137723	12GD1000K 235
240	215	31,5	74	230	236	15	21,3	12	038356	12GD1000K 240/1
	215	31,5	85	230	236	15	26,75	12	137724	12GD1000K 240
245	220	31,5	85	235	241	15	26,75	12	070630	12GD1000K 245
250	225	31,5	74	240	246	15	21,3	12	021921	12GD1000K 250/1
	225	31,5	85	240	246	15	26,75	12	137725	12GD1000K 250
260	235	31,5	85	250	256	15	26,75	12	039464	12GD1000K 260
275	250	31,5	74	265	271	15	21,3	12	036970	12GD1000K 275/1
280	255	31,5	74	270	276	15	21,3	12	023168	12GD1000K 280/1
	255	31,5	85	270	276	15	26,75	12	137728	12GD1000K 280
300	275	31,5	85	290	296	15	26,75	12	137730	12GD1000K 300
310	280	36,5	80	298	304	8,5	21,75	15	137731	12GD1000K 310
320	290	36,5	80	308	314	8,5	21,75	15	137732	12GD1000K 320
340	310	36,5	80	328	334	8,5	21,75	15	137733	12GD1000K 340
360	330	36,5	80	348	354	8,5	21,75	15	137735	12GD1000K 360
400	370	36,5	80	388	394	8,5	21,75	15	137737	12GD1000K 400
420	390	36,5	80	408	414	8,5	21,75	15	137738	12GD1000K 420
450	420	36,5	80	438	444	8,5	21,75	15	137740	12GD1000K 450
500	470	36,5	80	488	494	8,5	21,75	15	137742	12GD1000K 500
560	530	36,5	80	548	554	8,5	21,75	15	137743	12GD1000K 560
580	550	36,5	80	568	574	8,5	21,75	15	037072	12GD1000K 580
600	570	36,5	80	588	594	8,5	21,75	15	137744	12GD1000K 600

Further dimensions on request

For special requirements (fluid, temperature, pressure, speed...) or applications approaching maximum values, please contact us. Other materials available: **FPM**, **HNBR**, **TNBR**, **EPDM**...

12GD1000K seals with diameters between 20 and 1500 mm can be manufactured within short delivery time.
For prices and availability: **www.all-tec-business.net**

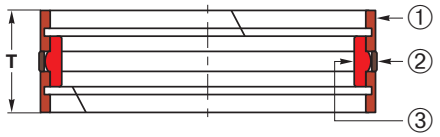

12GKD

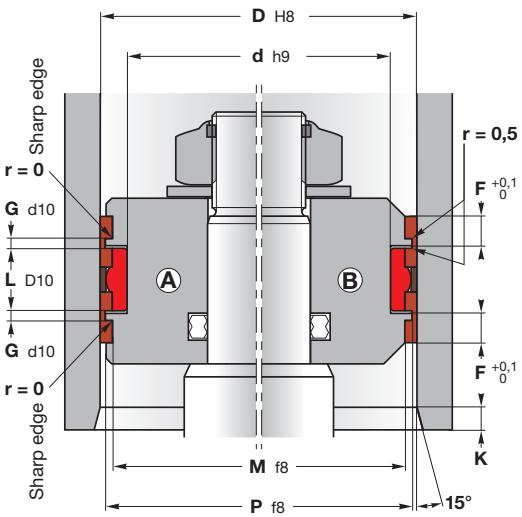

Machining of housings: see pages 48-49

12GKD compact slide ring seal type is used to seal and guide pistons on double acting hydraulic cylinders (in standard form it is suitable for use with all mineral oils).

12GKD consists of 4 parts, an elastic inner ring of PUR, a slide ring of abrasion-resistant PTFE-Bronze compound and two bearing rings of a pressure-resistant POM-PTFE-Bronze compound.

The guide rings make contact with the cylinder wall; there is no metallic contact between the piston and the cylinder body.

The internal elastic ring energises the slide ring to press it against the cylinder wall providing a sealing function at zero pressure. The onset of pressure compresses the elastic ring increasing the radial forces acting on the slide ring, thereby **increasing the sealing effect**.

Like the slide ring, the two bearing rings also sit on the elastic ring. The pressure-induced compression of the internal ring forces the two bearing rings, and the slide ring, against the cylinder wall so that there is **zero clearance** between bearing rings and cylinder wall. Even if the cylinder tube expands under pressure, the seal will adapt to the radial deformation maintaining both zero gap and the sealing function.

Operating conditions	**see page 8**
Pressure	
Construction Ⓐ	≤ 63 MPa
Construction Ⓑ	≤ 36 MPa
Temperature	-35°C to 100°C
Speed	≤ 1 m/s
Fluids	**see pages 22-45**

Materials	**see pages 10-19**
Guide rings ①	POM-PTFE bronze compound
Dynamic sealing element ②	PTFE-bronze
Energising element ③	PU

Assembly — **see pages 54-59**

On one-piece pistons

Advantages

- Efficient sealing at low and high pressures
- Compact seal : no loss of space
- Low friction
- Easy installation on monobloc pistons
- Guiding and sealing are performed by the seal
- Excellent abrasion resistance

Please contact us for applications approaching maximum values.

More information

On **www.all-tec-business.net**, click first on the reference and then on the material code to obtain the data sheet of the different materials.

For special requirements (fluid, temperature, pressure, speed...) or applications approaching maximum values, please contact us. Other materials available: **FPM**, **HNBR**, **TNBR**, **EPDM**...

D	d	L	T	M	P	G	F	K	HUNGER reference	Reference
40	26	15,5	30	32	36	3,5	7,25	7	010502	**12GKD 40/1**
45	31	15,5	30	37	41	3	7,25	7	010506	**12GKD 45/1**
50	34	20,5	32	42	46	3	5,8	7	010508	**12GKD 50/1**
63	47	20,5	32	55	59	3	5,8	7	010512	**12GKD 63/1**
70	54	20,5	32	62	66	3	5,8	7	010514	**12GKD 70/1**
80	62	22,5	36	72	76	3	6,8	7	010517	**12GKD 80/1**
90	72	22,5	36	82	86	3	6,8	7	010520	**12GKD 90/1**
100	82	22,5	36	92	96	3	6,8	7	010522	**12GKD 100/1**
110	92	22,5	36	102	106	3	6,8	10	010524	**12GKD 110/1**
125	103	26,5	43	115	121	4	8,3	10	010527	**12GKD 125/1**
140	118	26,5	43	130	136	4	8,3	10	010530	**12GKD 140/1**
155	133	26,5	43	145	151	4	8,3	10	010533	**12GKD 155/1**
160	138	26,5	43	150	156	4	8,3	10	010534	**12GKD 160/1**
180	158	26,5	48	170	176	6	10,8	10	010537	**12GKD 180/1**
195	170	31,5	48	185	191	4,5	8,3	10	019704	**12GKD 195/1**
200	175	31,5	48	190	196	4,5	8,3	10	010540	**12GKD 200/1**
210	185	31,5	58	200	206	8	13,3	12	010541	**12GKD 210/1**
220	195	31,5	58	210	216	8	13,3	12	010542	**12GKD 220/1**
235	210	31,5	74	225	231	15	21,3	12	010544	**12GKD 235/1**
240	215	31,5	74	230	236	15	21,3	12	010545	**12GKD 240/1**
250	225	31,5	74	240	246	15	21,3	12	010547	**12GKD 250/1**
280	255	31,5	74	270	276	15	21,3	12	010552	**12GKD 280/1**

Further dimensions on request

12GKD seals with diameters between 20 and 1500 mm can be manufactured within short delivery time.
For prices and availability: **www.all-tec-business.net**

NBR piston cup seal

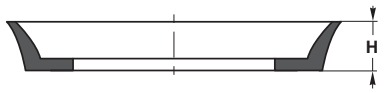

10DC

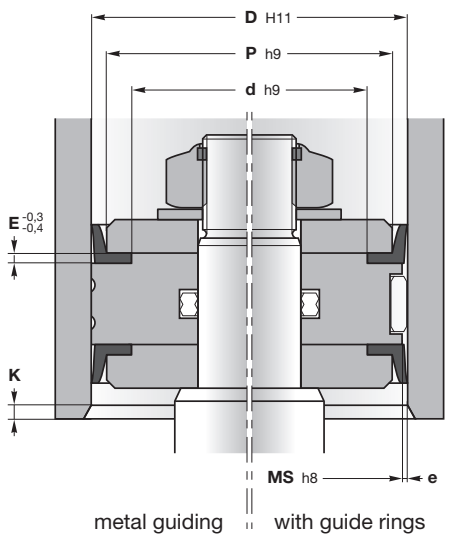

K = 0,35 H

e ≤ 0,3 mm

Machining of housings: see pages 48-49

10DC is a single acting piston seal primarily used on piston heads, plungers or rams in hydraulic or pneumatic and designed for split pistons.

Piston cups are recommended to handle **low pressures** in air, water, hydraulic fluids, and lubricating oils.

Piston cups are commonly used because of economical cost, efficient assemble, universal acceptance, and simple accessories.

Operating conditions	**see page 8**
Pressure	≤ 4 MPa
Temperature	-30°C to 100°C
Speed	≤ 0,25 m/s
Fluids	**see pages 22-45**

Materials	**see pages 10-19**
Seal	NBR8090

Assembly	**see pages 54-59**
On multi-piece pistons	

Advantages

- Low friction
- Easy to assemble
- Good price-performance ratio

Please contact us for applications approaching maximum values.

More information

On **www.all-tec-business.net**, click first on the reference and then on the material code to obtain the data sheet of the material.

For special requirements (fluid, temperature, pressure, speed...) or applications approaching maximum values, please contact us. Other materials available: **FPM**, **HNBR**, **TNBR**, **EPDM**...

D	d	H	E	P	Reference
11,11	3,96	6,37	2,38	6,74	**10DC 043**
12,7	6,35	4,78	2,38	8,33	**10DC 050**
15,87	5,55	6,35	2,38	11,11	**10DC 062**
19,05	6,35	4,76	2,38	13,89	**10DC 075**
25,4	11,11	6,35	2,38	19,05	**10DC 100**
30,16	11,11	7,93	2,38	20,63	**10DC 118**
31,75	11,11	6,35	2,38	23,01	**10DC 125**
34,93	9,52	6,35	3,17	25,4	**10DC 137**
36,51	9,52	9,52	3,17	26,99	**10DC 143**
38,1	15,87	9,52	3,17	28,58	**10DC 150**
41,28	12,7	9,52	3,17	31,75	**10DC 162**
44,45	15,87	9,52	3,17	34,93	**10DC 175**
50,8	22,22	9,52	3,17	41,28	**10DC 200**
53,98	22,22	9,52	3,17	44,2	**10DC 212**
57,15	22,22	9,52	3,96	47,63	**10DC 225**
60,33	19,05	9,52	3,96	50,8	**10DC 237**
63,5	22,22	9,52	3,96	53,98	**10DC 250**
69,85	12,7	12,7	3,17	60,33	**10DC 275**
76,2	25,4	12,7	4,76	66,68	**10DC 300**
82,55	28,58	12,7	3,96	73,03	**10DC 325**
88,9	55,56	12,7	3,17	79,38	**10DC 350**

D	d	H	E	P	Reference
95,25	30,16	15,87	3,17	84,14	**10DC 375**
101,6	19,05	12,7	4,76	92,08	**10DC 400**
107,95	30,16	15,87	3,17	98,43	**10DC 425**
114,3	76,2	9,52	3,17	104,8	**10DC 450**
120,65	60,33	15,87	4,76	109,5	**10DC 475**
127	76,2	12,7	3,17	117,5	**10DC 500**
133,35	95,25	12,7	4,76	120,7	**10DC 525**
139,7	101,6	15,87	6,35	127	**10DC 550**
146,05	107,95	15,87	6,35	133,4	**10DC 575**
152,4	114,3	9,52	3,17	142,9	**10DC 600**
158,75	122,22	15,87	3,17	146,1	**10DC 625**
165,1	149,2	9,52	3,17	155,6	**10DC 650**
171,45	127	15,87	6,35	158,8	**10DC 675**
177,8	101,6	12,7	4,76	166,7	**10DC 700**
184,15	133,35	15,87	6,35	171,5	**10DC 725**
203,2	127	12,7	4,76	193,7	**10DC 800**
228,6	152,4	15,87	4,76	215,9	**10DC 900**
254	209,55	15,87	3,96	241,3	**10DC 1000**
304,8	231,8	15,87	3,96	292,1	**10DC 1200**
355,6	279,4	19,05	6,35	330,2	**10DC 1400**
406,4	339,73	19,05	3,96	387,4	**10DC 1600**

10DC seals with diameters between 20 and 1500 mm can be manufactured within short delivery time.
For prices and availability: **www.all-tec-business.net**

NBR single acting piston seal
Inch dimensions

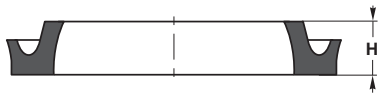

10DDE Inch

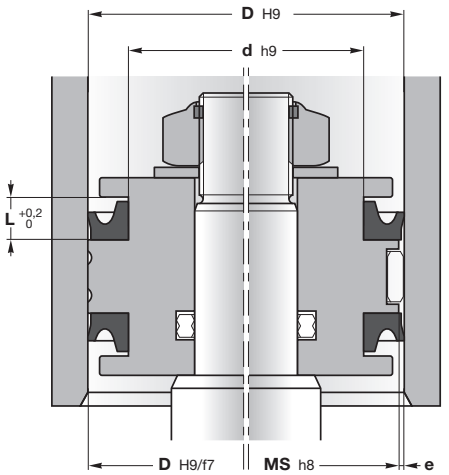

metal guiding | with guide rings

e (mm) ≤ 0,3 - 0,01 x P (MPa)

MS = D - 2e

Machining of housings: see pages 48-49

10DDE single acting piston seal can be used in hydraulic or pneumatic cylinders.

This NBR profile is designed with a shorter outer sealing lip which ensures low friction and pushes the load against the cylinder tube.

NB: The seal diameters are smaller than the metallic one, but once assembled the seal shows good sealing efficiency.

Operating conditions	**see page 8**
Pressure	≤ 8 MPa
Temperature	-30°C to 100°C
Speed	≤ 0,5 m/s
Fluids	**see pages 22-45**

Materials	**see pages 10-19**
Seal	NBR8075

Assembly	**see pages 54-59**
On one-piece pistons	

Advantages

- Easy installation on monobloc pistons
- Low friction
- Good price-performance ratio
- Small housing

Please contact us for applications approaching maximum values.

More information

On **www.all-tec-business.net**, click first on the reference and then on the material code to obtain the data sheet of the material.

ALL-TEC® SEALING SYSTEMS

D	d	L	H	Reference
13	6,7	6,3	4,76	**10DDE 050**
16	8,1	7	5,55	**10DDE 062**
19,05	12,7	5	3,17	**10DDE 075**
25,4	16,5	8	6,35	**10DDE 100**
27	17,5	8	6,35	**10DDE 106**
29	19,05	8	6,35	**10DDE 112**
32	19,3	8	6,35	**10DDE 125**
35	22,3	8	6,35	**10DDE 137**
37	26	8	6,35	**10DDE 143**
38	30	8	6,35	**10DDE 150**
38,1	25,4	9,52	7,92	**10DDE 150100**
40	27,3	8	6,35	**10DDE 156**
42	30,9	8	6,35	**10DDE 162**
45	35,5	8,5	7	**10DDE 175**
44,45	28,57	11,1	9,52	**10DDE 175112**
48	32,1	9,5	7,93	**10DDE 187**
49	35	11	9,52	**10DDE 193**
51	41,5	9	7,14	**10DDE 200**
54	41,3	11	9,52	**10DDE 212**
53,97	38,1	11,1	9,52	**10DDE 212150**
57	44,3	8	6,35	**10DDE 225**
57,15	41,27	11,1	9,52	**10DDE 225162**
61	48,3	8	6,35	**10DDE 237**
64	46,3	10,5	8,85	**10DDE 250**
63,5	47,62	11,1	9,52	**10DDE 250187**
70	54,1	9,5	7,93	**10DDE 275**
76	57,9	10,5	8,73	**10DDE 300**

D	d	L	H	Reference
76,2	57,15	14,3	12,7	**10DDE 300225**
80	67,3	8	6,35	**10DDE 312**
83	71,9	8,5	7,5	**10DDE 325**
82,55	63,5	14,3	12,7	**10DDE 325250**
86	73,3	11	9,52	**10DDE 337**
89	76,3	8	6,35	**10DDE 350**
95	76,7	9	7,4	**10DDE 375**
95,25	76,2	14,3	12,7	**10DDE 375300**
99	86,3	11	9,52	**10DDE 387**
102	89,3	11	9,52	**10DDE 400**
108	95,3	9,5	7,93	**10DDE 425**
111	94,7	9,5	7,93	**10DDE 437**
115	89,6	19	15,9	**10DDE 450350**
118	105,3	11	9,52	**10DDE 462**
121	108,3	11	9,52	**10DDE 475**
127	108	11	9,52	**10DDE 500**
127	101,6	17,45	15,87	**10DDE 500400**
130	117,3	11	9,52	**10DDE 512**
134	121,3	11	9,52	**10DDE 525**
149	136,3	11	9,52	**10DDE 587**
153	127,6	19	15,9	**10DDE 600500**
159	133,6	19	15,9	**10DDE 625525**
165	139,6	19	15,9	**10DDE 650550**
172	153	12,5	11,1	**10DDE 675**
191	159,3	22	19	**10DDE 700625**
204	172,3	22	19	**10DDE 800675**
210	178,3	22	19	**10DDE 825700**
254	235	14,5	12,7	**10DDE 1000**
254	222,25	20,62	19,05	**10DDE 1000875**
305	279,6	14,5	12,7	**10DDE 1200**

For special requirements (fluid, temperature, pressure, speed...) or applications approaching maximum values, please contact us. Other materials available: **FPM**, **HNBR**, **TNBR**, **EPDM**...

10DDE seals with diameters between 20 and 1500 mm can be manufactured within short delivery time.
For prices and availability: **www.all-tec-business.net**

NBR single acting piston seal
Metric dimensions

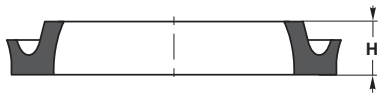

10DDEM Metric

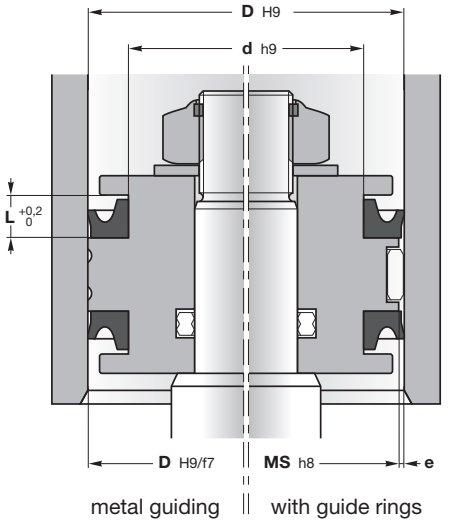

e (mm) ≤ 0,3 - 0,01 x P (MPa)

MS = D - 2e

Machining of housings: see pages 48-49

10DDEM single acting piston seal can be used in hydraulic or pneumatic cylinders.

This NBR profile is designed with a shorter outer sealing lip which ensures **low friction** and pushes the load against the cylinder tube.

Operating conditions	**see page 8**
Pressure	≤ 8 MPa
Temperature	-30°C to 100°C
Speed	≤ 0,5 m/s
Fluids	**see pages 22-45**

Materials	**see pages 10-19**
Seal	NBR8490 (90 Sh A) NBR8075 (75 Sh A)

Assembly	**see pages 54-59**
On one-piece pistons	

Advantages

- Easy installation on monobloc pistons
- Low friction
- Good price-performance ratio
- Small housing

Please contact us for applications approaching maximum values.

More information

On **www.all-tec-business.net**, click first on the reference and then on the material code to obtain the data sheet of the different materials.

For special requirements (fluid, temperature, pressure, speed...) or applications approaching maximum values, please contact us. Other materials available: **FPM**, **HNBR**, **TNBR**, **EPDM**...

D	d	L	H	Reference
12	6	4,5	4	**10DDEM 1206**
16	10	4,5	4	**10DDEM 1610**
20	12	6	5,5	**10DDEM 2012**
25	17	6	5,5	**10DDEM 2517**
32	24	6	5,5	**10DDEM 3224**
40	30	7,5	7	**10DDEM 4030**
50	40	7,5	7	**10DDEM 5040**
55	45	7,5	7	**10DDEM 5545**
60	50	7,5	7	**10DDEM 6050**
63	53	7,5	7	**10DDEM 6353**
65	55	7,5	7	**10DDEM 6555**
70	58	9,5	8,5	**10DDEM 7058**
75	63	9,5	8,5	**10DDEM 7563**
80	68	9,5	8,5	**10DDEM 8068**
85	73	9,5	8,5	**10DDEM 8573**
90	78	9,5	8,5	**10DDEM 9078**
100	88	9,5	8,5	**10DDEM 100088**
105	93	9,5	8,5	**10DDEM 105093**
110	98	9,5	8,5	**10DDEM 110098**
120	105	11	10	**10DDEM 120105**
125	110	11	10	**10DDEM 125110**
140	125	11	10	**10DDEM 140125**
145	130	11	10	**10DDEM 145130**
150	135	11	10	**10DDEM 150135**
160	145	11	10	**10DDEM 160145**
180	160	15	14	**10DDEM 180160**
200	180	15	14	**10DDEM 200180**
220	200	15	14	**10DDEM 220200**
250	230	15	14	**10DDEM 250230**

10DDEM seals with diameters between 20 and 1500 mm can be manufactured within short delivery time.
For prices and availability: **www.all-tec-business.net**

10DDEM.../C

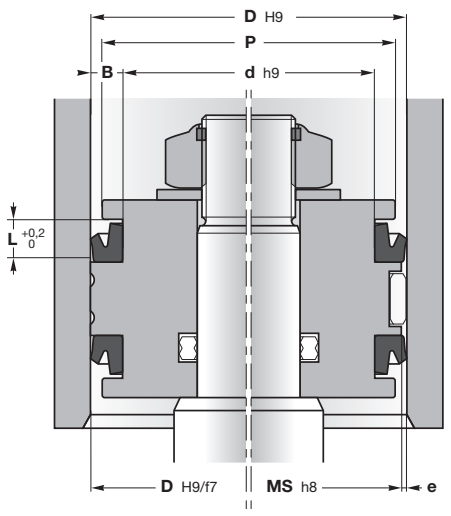

metal guiding || with guide rings

P = d + 1,7 B

e (mm) ≤ 0,3 - 0,01 x P (MPa)

MS = D - 2e

Machining of housings: see pages 48-49

10DDEM.../C single acting piston seal can be used in hydraulic or pneumatic cylinders.

This NBR profile is designed with a shorter outer sealing lip which ensures **low friction** and pushes the load against the cylinder tube.

Operating conditions	**see page 8**
Pressure	≤ 12 MPa
Temperature	-30°C to 100°C
Speed	≤ 0,5 m/s
Fluids	**see pages 22-45**

Materials	**see pages 10-19**
Seal	NBR6280

Assembly	**see pages 54-59**
On one-piece pistons	

Advantages

- Easy installation on monobloc pistons
- Low friction
- Good price-performance ratio
- Small housing

Please contact us for applications approaching maximum values.

More information

On **www.all-tec-business.net**, click first on the reference and then on the material code to obtain the data sheet of the material.

For special requirements (fluid, temperature, pressure, speed...) or applications approaching maximum values, please contact us. Other materials available: **FPM**, **HNBR**, **TNBR**, **EPDM**...

11DDEM.../C FPM page 519

D	d	L	H	Reference
20	12	6	5,5	**10DDEM 2012/C**
25	17	6	5,5	**10DDEM 2517/C**
32	24	6	5,5	**10DDEM 3224/C**
40	30	7,5	7	**10DDEM 4030/C**
50	40	7,5	7	**10DDEM 5040/C**
60	48	8	7,5	**10DDEM 6048/C**
60	50	7,5	7	**10DDEM 6050/C**
63	53	7,5	7	**10DDEM 6353/C**
70	58	9,5	8,5	**10DDEM 7060/C**
80	68	9,5	8,5	**10DDEM 8068/C**
90	78	9,5	8,5	**10DDEM 9078/C**
100	88	9,5	8,5	**10DDEM 100088/C**
110	95	11	10	**10DDEM 110098/C**
125	110	11	10	**10DDEM 125110/C**
140	125	11	10	**10DDEM 140125/C**
150	135	11	10	**10DDEM 150135/C**
160	145	11	10	**10DDEM 160145/C**
200	180	15	14	**10DDEM 200180/C**

10DDEM.../C seals with diameters between 20 and 1500 mm can be manufactured within short delivery time.
For prices and availability: **www.all-tec-business.net**

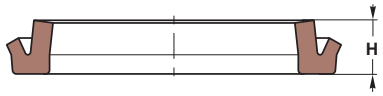

11DDEM.../C FPM

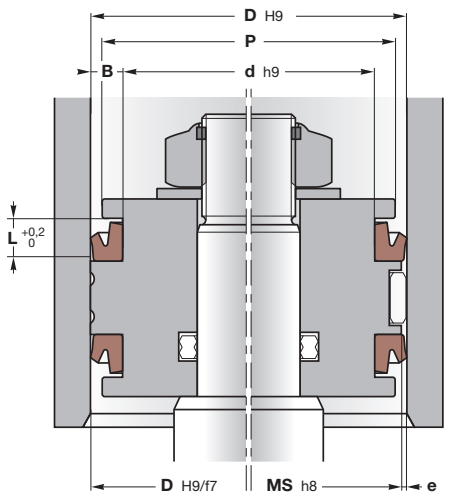

metal guiding | with guide rings

P = d + 1,7 B

e (mm) ≤ 0,3 - 0,01 x P (MPa)

MS = D - 2e

Machining of housings: see pages 48-49

11DDEM.../C FPM single acting piston seal can be used in hydraulic or pneumatic cylinders. This FPM profile is designed with a shorter outer sealing lip which ensures low friction and pushes the load against the cylinder tube.

11DDEM.../C FPM is especially suitable for applications where there is contact with aggressive fuels and chemicals or at high temperature up to 200°C.

Operating conditions	**see page 8**
Pressure	≤ 12 MPa
Temperature	-10°C to 200°C
Speed	≤ 0,5 m/s
Fluids	**see pages 22-45**

Materials	**see pages 10-19**
Seal	FPM6282

Assembly	**see pages 54-59**
On one-piece pistons	

Advantages

- Easy installation on monobloc pistons
- Low friction
- Good price-performance ratio
- Small housing
- High chemical compatibility
- Large temperature range

Please contact us for applications approaching maximum values.

More information

On **www.all-tec-business.net**, click first on the reference and then on the material code to obtain the data sheet of the material.

For special requirements (fluid, temperature, pressure, speed...) or applications approaching maximum values, please contact us. Other materials available: **FPM**, **HNBR**, **TNBR**, **EPDM**...

D	d	L	H	Reference
20	12	6	5,5	**11DDEM 2012/C FPM**
25	17	6	5,5	**11DDEM 2517/C FPM**
32	24	6	5,5	**11DDEM 3224/C FPM**
40	30	7,5	7	**11DDEM 4030/C FPM**
50	40	7,5	7	**11DDEM 5040/C FPM**
60	50	7,5	7	**11DDEM 6050/C FPM**
63	53	7,5	7	**11DDEM 6353/C FPM**
80	68	9,5	8,5	**11DDEM 8068/C FPM**
100	88	9,5	8,5	**11DDEM 100088/C FPM**
125	110	11	10	**11DDEM 125110/C FPM**
150	135	11	10	**11DDEM 150135/C FPM**
160	145	11	10	**11DDEM 160145/C FPM**
200	180	15	14	**11DDEM 200180/C FPM**

11DDEM.../C FPM seals with diameters between 20 and 1500 mm can be manufactured within short delivery time.
For prices and availability: **www.all-tec-business.net**

NBR piston seal with symmetrical lips
Metric dimensions

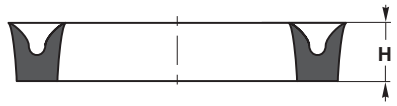

10DUM

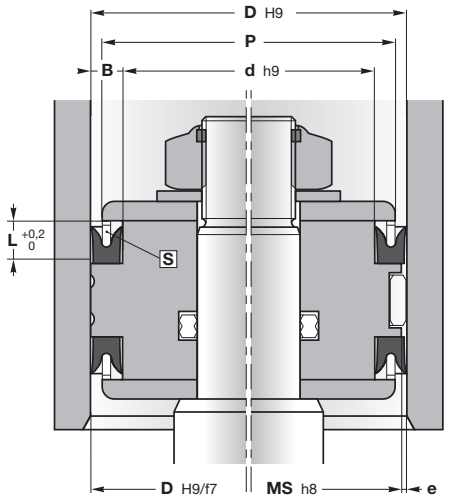

metal guiding | with guide rings

P = d + 1,7 B

e (mm) ≤ 0,3 - 0,01 x P (MPa)

MS = D - 2e

Machining of housings: see pages 48-49

10DUM is a symmetrical U-ring with sharp sealing lips. In this case, the sealing edges aren't below the seal height, therefore this profile has to be used with a header ring. The header ring can be made in metal, plastic or in rubber.

This profile is primarily used as piston seal, but it can also be used as rod seal.

10DUM is also suitable for pneumatic applications.

Operating conditions	**see page 8**
Pressure	≤ 10 MPa
Temperature	-15°C to 120°C
Speed	≤ 0,5 m/s
Fluids	**see pages 22-45**

Materials	**see pages 10-19**
Seal	NBR8090

Assembly **see pages 54-59**

On multi-piece pistons

With profiles 10DU and 10DUM a header ring S must be mounted with the seal

Advantages

Low friction

Good price-performance ratio

Suitable for rods and pistons

Please contact us for applications approaching maximum values.

More information

On **www.all-tec-business.net**, click first on the reference and then on the material code to obtain the data sheet of the material.

For special requirements (fluid, temperature, pressure, speed...) or applications approaching maximum values, please contact us. Other materials available: **FPM**, **HNBR**, **TNBR**, **EPDM**...

10DU: Inch dimensions page 524

D	d	L	H	Reference
12	5	6,5	5	**10DUM 1205**
15	8	7,5	6	**10DUM 1508**
16	8	7,5	6	**10DUM 1608**
	10	4,5	3	**10DUM 1610**
17	6	7,5	6	**10DUM 1706**
18	6	9,5	8	**10DUM 1806**
20	6	9,5	8	**10DUM 2006**
	10	9,5	8	**10DUM 2010**
22	10	7,5	6	**10DUM 2210**
24	12	7,5	6	**10DUM 2412**
25	8	7,5	6	**10DUM 2508**
	10	11,5	10	**10DUM 2510**
26	10	9,5	8	**10DUM 2610**
28	12	11,5	10	**10DUM 2812**
	14	11,5	10	**10DUM 2814**
30	10	11,5	10	**10DUM 3010**
	13	11,5	10	**10DUM 3013**
	15	9,5	8	**10DUM 3015**
	15	11,5	10	**10DUM 3015/1**
	18	11,5	10	**10DUM 3018**
32	14	11,5	10	**10DUM 3214**
	16	9,5	8	**10DUM 3216**
34	18	9,5	8	**10DUM 3418**
	22	11,5	10	**10DUM 3422**
35	12	13,5	12	**10DUM 3512**
	15	11,5	10	**10DUM 3515**
	20	11,5	10	**10DUM 3520**
36	16	11,5	10	**10DUM 3616**
	20	9,5	8	**10DUM 3620**
38	17	11,5	10	**10DUM 3817**
	18	11,5	10	**10DUM 3818**
	22	11,5	10	**10DUM 3822**
40	18	11,5	10	**10DUM 4018**
	20	11,5	10	**10DUM 4020**
	25	11,5	10	**10DUM 4025**

D	d	L	H	Reference
42	22	11,5	10	**10DUM 4222**
	25	9,5	8	**10DUM 4225**
43	20	13,5	12	**10DUM 4320**
45	25	11,5	10	**10DUM 4525**
	30	11,5	10	**10DUM 4530**
	32	11,5	10	**10DUM 4532**
46	26	11,5	10	**10DUM 4626**
48	28	11,5	10	**10DUM 4828**
50	25	13,5	12	**10DUM 5025**
	30	11,5	10	**10DUM 5030**
	35	11,5	10	**10DUM 5035**
52	32	11,5	10	**10DUM 5232**
55	35	11,5	10	**10DUM 5535**
56	40	11,5	10	**10DUM 5640**
58	38	11,5	10	**10DUM 5838**
60	30	16,5	15	**10DUM 6030**
	35	13,5	12	**10DUM 6035**
	40	11,5	10	**10DUM 6040**
65	40	13,5	12	**10DUM 6540**
	45	11,5	10	**10DUM 6545**
68	48	11,5	10	**10DUM 6848**
70	46	13,5	12	**10DUM 7046**
	50	11,5	10	**10DUM 7050**
75	55	11,5	10	**10DUM 7555**
80	55	13,5	12	**10DUM 8055**
	60	11,5	10	**10DUM 8060**
85	55	16,5	15	**10DUM 8555**
	65	11,5	10	**10DUM 8565**
90	60	16,5	15	**10DUM 9060**
	65	13,5	12	**10DUM 9065**
	70	11,5	10	**10DUM 9070**
95	65	13,5	12	**10DUM 9565**
	75	11,5	10	**10DUM 9575**

References 10DUM and 10DUM.../ROD are identical seals.

10DUM seals with diameters between 20 and 1500 mm can be manufactured within short delivery time.
For prices and availability: **www.all-tec-business.net**

NBR piston seal with symmetrical lips
Metric dimensions

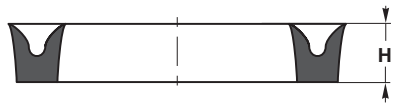

10DUM

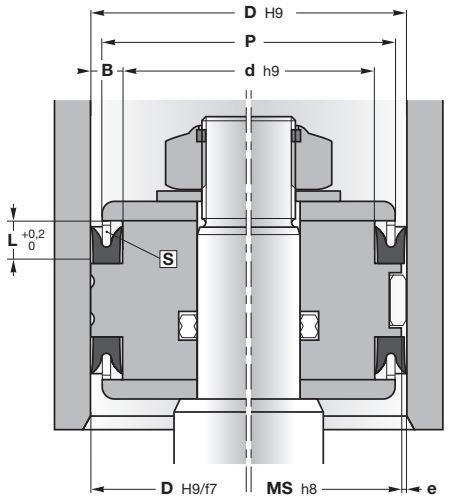

metal guiding | with guide rings

P = d + 1,7 B

e (mm) ≤ 0,3 - 0,01 x P (MPa)

MS = D - 2e

Machining of housings: see pages 48-49

10DUM is a symmetrical U-ring with sharp sealing lips. In this case, the sealing edges aren't below the seal height, therefore this profile has to be used with a header ring. The header ring can be made in metal, plastic or in rubber.

This profile is primarily used as piston seal, but it can also be used as rod seal.

10DUM is also suitable for pneumatic applications.

Operating conditions	**see page 8**
Pressure	≤ 10 MPa
Temperature	-15°C to 120°C
Speed	≤ 0,5 m/s
Fluids	**see pages 22-45**

Materials	**see pages 10-19**
Seal	NBR8090

Assembly **see pages 54-59**

On multi-piece pistons

With profiles 10DU and 10DUM a header ring S must be mounted with the seal

Advantages

Low friction

Good price-performance ratio

Suitable for rods and pistons

Please contact us for applications approaching maximum values.

More information

On **www.all-tec-business.net**, click first on the reference and then on the material code to obtain the data sheet of the material.

For special requirements (fluid, temperature, pressure, speed...) or applications approaching maximum values, please contact us. Other materials available: **FPM**, **HNBR**, **TNBR**, **EPDM**...

10DU: Inch dimensions page 524

D	d	L	H	Reference
100	75	16,5	15	**10DUM 100075**
	80	11,5	10	**10DUM 100080**
105	75	16,5	15	**10DUM 105075**
	80	13,5	12	**10DUM 105080**
	85	11,5	10	**10DUM 105085**
110	80	16,5	15	**10DUM 110080**
	85	13,5	12	**10DUM 110085**
	90	11,5	10	**10DUM 110090**
115	85	16,5	15	**10DUM 115085**
	95	11,5	10	**10DUM 115095**
120	90	16,5	15	**10DUM 120090**
	100	11,5	10	**10DUM 120100**
125	95	16,5	15	**10DUM 125095**
	100	13,5	12	**10DUM 125100**
130	100	16,5	15	**10DUM 130100**
135	110	13,5	12	**10DUM 135110**
140	110	16,5	15	**10DUM 140110**
	120	11,5	10	**10DUM 140120**
145	115	13,5	12	**10DUM 145115**
150	120	16,5	15	**10DUM 150120**
	125	19,5	18	**10DUM 150125**
155	125	16,5	15	**10DUM 155125**
160	130	16,5	15	**10DUM 160130**
	135	19,5	18	**10DUM 160135**
165	140	19,5	18	**10DUM 165140**
170	140	16,5	15	**10DUM 170140**
175	145	16,5	15	**10DUM 175145**
180	150	16,5	15	**10DUM 180150**
190	160	16,5	15	**10DUM 190160**
200	160	21,5	20	**10DUM 200160**
	170	16,5	15	**10DUM 200170**
210	170	21,5	20	**10DUM 210170**
	180	23,5	22	**10DUM 210180**

D	d	L	H	Reference
220	180	21,5	20	**10DUM 220180**
	190	16,5	15	**10DUM 220190**
225	195	16,5	15	**10DUM 225195**
230	200	16,5	15	**10DUM 230200**
240	200	21,5	20	**10DUM 240200**
250	210	21,5	20	**10DUM 250210**
260	220	21,5	20	**10DUM 260220**
270	230	21,5	20	**10DUM 270230**
280	240	21,5	20	**10DUM 280240**
290	250	21,5	20	**10DUM 290250**
300	260	21,5	20	**10DUM 300260**
320	280	21,5	20	**10DUM 320280**
340	300	21,5	20	**10DUM 340300**
350	310	21,5	20	**10DUM 350310**
	320	23,5	22	**10DUM 350320**
360	320	21,5	20	**10DUM 360320**
380	340	21,5	20	**10DUM 380340**
400	350	26,5	25	**10DUM 400350**
450	400	26,5	25	**10DUM 450400**
500	450	26,5	25	**10DUM 500450**

References 10DUM and 10DUM.../ROD are identical seals.

10DUM seals with diameters between 20 and 1500 mm can be manufactured within short delivery time.
For prices and availability: **www.all-tec-business.net**

NBR piston seal with symmetrical lips
Inch dimensions

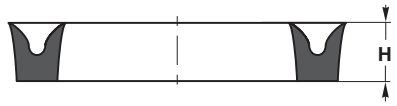

10DU

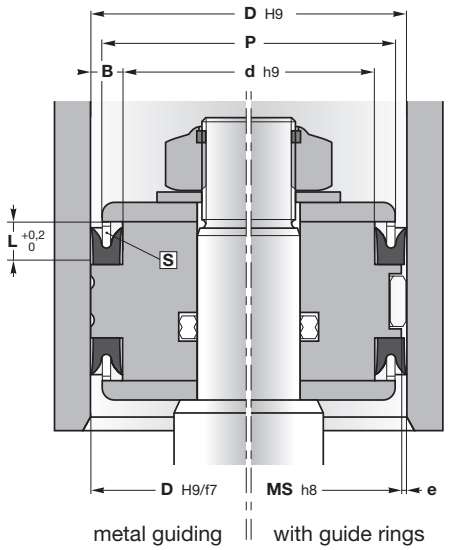

P = d + 1,7 B

e (mm) ≤ 0,3 - 0,01 x P (MPa)

MS = D - 2e

Machining of housings: see pages 48-49

10DU is a symmetrical U-ring with sharp sealing lips. In this case, the sealing edges aren't below the seal height, therefore this profile has to be used with a header ring. The header ring can be made in metal, plastic or in rubber.

This profile is primarily used as piston seal, but it can also be used as rod seal.

10DU is also suitable for pneumatic applications.

Operating conditions	**see page 8**
Pressure	≤ 10 MPa
Temperature	-15°C to 120°C
Speed	≤ 0,5 m/s
Fluids	**see pages 22-45**

Materials	**see pages 10-19**
Seal	NBR8090

Assembly **see pages 54-59**

On multi-piece pistons

With profiles 10DU and 10DUM a header ring S must be mounted with the seal

Advantages

Low friction

Good price-performance ratio

Suitable for rods and pistons

Please contact us for applications approaching maximum values.

More information

On **www.all-tec-business.net**, click first on the reference and then on the material code to obtain the data sheet of the material.

For special requirements (fluid, temperature, pressure, speed...) or applications approaching maximum values, please contact us. Other materials available: **FPM**, **HNBR**, **TNBR**, **EPDM**...

Inch dimensions				
D	**d**	**L**	**H**	**Reference**
9,52	4,76	4	2,38	**10DU 037018**
11,11	6,35	4,5	3,17	**10DU 043025**
14,28	7,93	4,5	3,17	**10DU 056031**
15,87	9,52	4,5	3,17	**10DU 062037**
19,05	11,11	6,5	4,76	**10DU 075043**
25,4	15,87	8	6,35	**10DU 100062**
31,75	19,05	8	6,35	**10DU 125075**
36,51	20,63	11	9,52	**10DU 143081**
46,04	26,99	11	9,52	**10DU 181106**
55,56	38,1	8	6,35	**10DU 218150**
79,38	60,33	11	9,52	**10DU 312237**
101,6	77,79	14,5	12,7	**10DU 400306**
111,12	92,08	11	9,52	**10DU 437362**
152,4	127	14,5	12,7	**10DU 600500**
158,8	133,35	14,5	12,7	**10DU 625525**

References 10DU and 10DU.../ROD are identical seals.

10DU seals with diameters between 20 and 1500 mm can be manufactured within short delivery time.
For prices and availability: **www.all-tec-business.net**

NBR piston seal with symmetrical lips

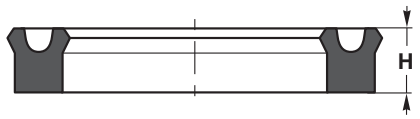

10DUM.../N

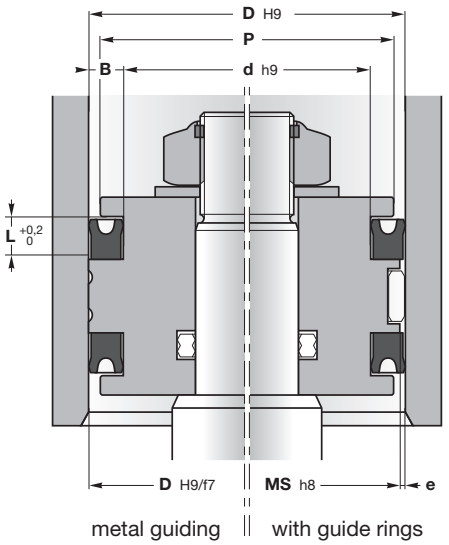

P = d + 1,7 B

e (mm) ≤ 0,3 - 0,01 x P (MPa)

MS = D - 2e

Machining of housings: see pages 48-49

10DUM.../N can be used in both rod and piston applications thanks to the symmetrical lip design.

10DUM.../N is also suitable for pneumatic applications.

Operating conditions	**see page 8**
Pressure	≤ 10 MPa
Temperature	-30°C to 100°C
Speed	≤ 0,5 m/s
Fluids	**see pages 22-45**

Materials	**see pages 10-19**
Seal	NBR8085 or NBR8490

Assembly	**see pages 54-59**
On one-piece pistons	

Advantages

- Low friction
- Good price-performance ratio
- Suitable for rods and pistons

Please contact us for applications approaching maximum values.

More information

On **www.all-tec-business.net**, click first on the reference and then on the material code to obtain the data sheet of the material.

For special requirements (fluid, temperature, pressure, speed...) or applications approaching maximum values, please contact us. Other materials available: **FPM**, **HNBR**, **TNBR**, **EPDM**...

D	d	L	H	Reference
12	4	4,5	4	**10DUM 1204/N**
13	5	4,5	4	**10DUM 1305/N**
14	6	4,5	4	**10DUM 1406/N**
15	5	5,5	5	**10DUM 1505/N**
	7	4,5	4	**10DUM 1507/N**
16	6	5,5	5	**10DUM 1606/N**
	8	4,5	4	**10DUM 1608/N**
18	8	5,5	5	**10DUM 1808/N**
	10	4,5	4	**10DUM 1810/N**
20	8	6,6	6	**10DUM 2008/N**
	10	5,5	5	**10DUM 2010/N**
	12	4,5	4	**10DUM 2012/N**
22	10	6,6	6	**10DUM 2210/N**
	12	5,5	5	**10DUM 2212/N**
	14	4,5	4	**10DUM 2214/N**
24	12	6,6	6	**10DUM 2412/N**
	14	5,5	5	**10DUM 2414/N**
	16	4,5	4	**10DUM 2416/N**
25	13	6,6	6	**10DUM 2513/N**
	15	5,5	5	**10DUM 2515/N**
	17	4,5	4	**10DUM 2517/N**
26	16	5,5	5	**10DUM 2616/N**
	18	4,5	4	**10DUM 2618/N**
27	15	6,6	6	**10DUM 2715/N**
28	16	6,6	6	**10DUM 2816/N**
	18	5,5	5	**10DUM 2818/N**
	20	4,5	4	**10DUM 2820/N**
30	15	8,3	7,5	**10DUM 3015/N**
	18	6,6	6	**10DUM 3018/N**
	20	5,5	5	**10DUM 3020/N**
	22	4,5	4	**10DUM 3022/N**
32	20	6,6	6	**10DUM 3220/N**
	22	5,5	5	**10DUM 3222/N**
	24	4,5	4	**10DUM 3224/N**
33	21	6,6	6	**10DUM 3321/N**
	25	4,5	4	**10DUM 3325/N**

D	d	L	H	Reference
34	22	6,6	6	**10DUM 3422/N**
	24	5,5	5	**10DUM 3424/N**
	26	4,5	4	**10DUM 3426/N**
35	20	8,3	7,5	**10DUM 3520/N**
	23	6,6	6	**10DUM 3523/N**
	25	5,5	5	**10DUM 3525/N**
	27	4,5	4	**10DUM 3527/N**
36	24	6,6	6	**10DUM 3624/N**
	26	5,5	5	**10DUM 3626/N**
	28	4,5	4	**10DUM 3628/N**
37	25	6,6	6	**10DUM 3725/N**
	29	4,5	4	**10DUM 3729/N**
38	26	6,6	6	**10DUM 3826/N**
	28	5,5	5	**10DUM 3828/N**
	30	4,5	4	**10DUM 3830/N**
40	25	8,3	7,5	**10DUM 4025/N**
	28	6,6	6	**10DUM 4028/N**
	30	5,5	5	**10DUM 4030/N**
	32	4,5	4	**10DUM 4032/N**
42	32	5,5	5	**10DUM 4232/N**
44	32	6,6	6	**10DUM 4432/N**
45	30	8,3	7,5	**10DUM 4530/N**
	33	6,6	6	**10DUM 4533/N**
	35	5,5	5	**10DUM 4535/N**
46	36	5,5	5	**10DUM 4636/N**
48	38	5,5	5	**10DUM 4838/N**
50	35	8,3	7,5	**10DUM 5035/N**
	38	6,6	6	**10DUM 5038/N**
	40	5,5	5	**10DUM 5040/N**
52	40	6,6	6	**10DUM 5240/N**
	42	5,5	5	**10DUM 5242/N**
55	40	8,3	7,5	**10DUM 5540/N**
	43	6,6	6	**10DUM 5543/N**
	45	5,5	5	**10DUM 5545/N**
56	46	5,5	5	**10DUM 5646/N**

References 10DUM.../N and 10DUM.../N/ROD are identical seals.

10DUM.../N seals with diameters between 20 and 1500 mm can be manufactured within short delivery time.
For prices and availability: **www.all-tec-business.net**

NBR piston seal with symmetrical lips

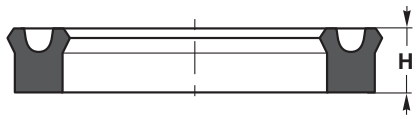

10DUM.../N

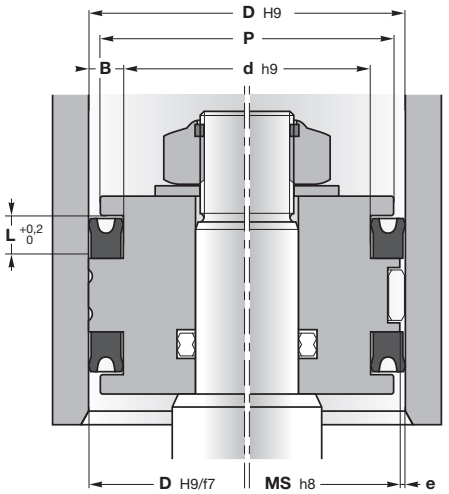

metal guiding || with guide rings

P = d + 1,7 B

e (mm) ≤ 0,3 - 0,01 x P (MPa)

MS = D - 2e

Machining of housings: see pages 48-49

10DUM.../N can be used in both rod and piston applications thanks to the symmetrical lip design.

10DUM.../N is also suitable for pneumatic applications.

Operating conditions	**see page 8**
Pressure	≤ 10 MPa
Temperature	-30°C to 100°C
Speed	≤ 0,5 m/s
Fluids	**see pages 22-45**

Materials	**see pages 10-19**
Seal	NBR8085 or NBR8490

Assembly	**see pages 54-59**
On one-piece pistons	

Advantages

- Low friction
- Good price-performance ratio
- Suitable for rods and pistons

Please contact us for applications approaching maximum values.

More information

On **www.all-tec-business.net**, click first on the reference and then on the material code to obtain the data sheet of the material.

For special requirements (fluid, temperature, pressure, speed...) or applications approaching maximum values, please contact us. Other materials available: **FPM**, **HNBR**, **TNBR**, **EPDM**...

D	d	L	H	Reference
58	46	6,6	6	**10DUM 5846/N**
60	45	8,3	7,5	**10DUM 6045/N**
	48	6,6	6	**10DUM 6048/N**
	50	5,5	5	**10DUM 6050/N**
62	50	6,6	6	**10DUM 6250/N**
63	51	6,6	6	**10DUM 6351/N**
	53	5,5	5	**10DUM 6353/N**
65	50	8,3	7,5	**10DUM 6550/N**
	53	6,6	6	**10DUM 6553/N**
	55	5,5	5	**10DUM 6555/N**
66	54	6,6	6	**10DUM 6654/N**
67	55	6,6	6	**10DUM 6755/N**
70	55	8,3	7,5	**10DUM 7055/N**
	60	5,5	5	**10DUM 7060/N**
73	63	5,5	5	**10DUM 7363/N**
75	60	8,3	7,5	**10DUM 7560/N**
	65	5,5	5	**10DUM 7565/N**

D	d	L	H	Reference
80	65	8,3	7,5	**10DUM 8065/N**
	70	5,5	5	**10DUM 8070/N**
85	70	8,3	7,5	**10DUM 8570/N**
90	75	8,3	7,5	**10DUM 9075/N**
	80	5,5	5	**10DUM 9080/N**
95	80	8,3	7,5	**10DUM 9580/N**
	85	5,5	5	**10DUM 9585/N**
100	85	8,3	7,5	**10DUM 100085/N**
	90	5,5	5	**10DUM 100090/N**
105	90	8,3	7,5	**10DUM 105090/N**
110	95	8,3	7,5	**10DUM 110095/N**
	100	5,5	5	**10DUM 110100/N**
120	105	8,3	7,5	**10DUM 120105/N**
125	110	8,3	7,5	**10DUM 125110/N**
130	115	8,3	7,5	**10DUM 130115/N**
140	125	8,3	7,5	**10DUM 140125/N**

References 10DUM.../N and 10DUM.../N/ROD are identical seals.

10DUM.../N seals with diameters between 20 and 1500 mm can be manufactured within short delivery time.
For prices and availability: **www.all-tec-business.net**

Fabric reinforced single acting piston seal with guide ring

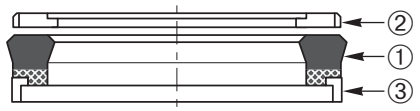

10B.../NWO/KR

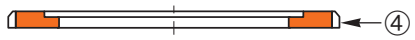

10KR

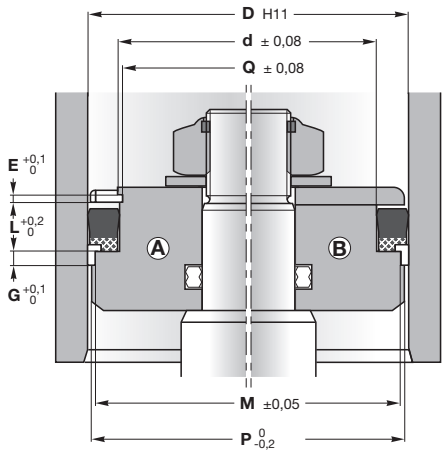

Machining of housings: see pages 48-49

10B.../NWO/KR is composed of an elastomer rubber sealing element, a fabric reinforced base and an angular integrated wear ring which guides the piston in the cylinder and supports radial loads. The fabric reinforced base **prevents the seal from extrusion** and the guide/back-up rings enables higher pressure conditions and minimises the extrusion gap. The sealing element has a low compression set and the sealing lips are produced to give an optimum efficiency.

10B.../NWO/KR is also composed of a keeper ring which helps the assembly in the open groove of the piston seal, especially those with a large radial section.

Operating conditions	**see page 8**
Pressure	≤ 50 MPa
Temperature	-30°C to 120°C
Speed	≤ 0,5 m/s
Fluids	**see pages 22-45**

Materials	**see pages 10-19**
Sealing element ①	N8T60/N8T60-C
Keeper ring **10KR** ② as part of **10B.../NWO/KR**	PO0WC
Guide ring ③	PO0WC
Keeper ring **10KR** alone ④	POM24

Assembly	**see pages 54-59**
On one-piece pistons Ⓐ	
On two-piece pistons Ⓑ	

Advantages

- Efficient sealing even at low pressure
- Small section
- Extrusion resistance at high pressure

Please contact us for applications approaching maximum values.

More information

On **www.all-tec-business.net**, click first on the reference and then on the material code to obtain the data sheet of the different materials.

For special requirements (fluid, temperature, pressure, speed...) or applications approaching maximum values, please contact us. Other materials available: **FPM**, **HNBR**, **TNBR**, **EPDM**...

10B.../NWO/KR								
D	**d**	**L**	**G**	**E**	**M**	**P**	**Q**	**Reference**
35	22	10	6,35	3,1	31,4	34	17,8	**10B 137086/NWO/KR**
40	26	9,4	6,35	3,1	35,4	39	21,6	**10B 157102/NWO/KR**
50	30	14,5	6,35	3,35	44,3	49	25,8	**10B 196118/NWO/KR**
63	45	11	6,35	3,1	58,4	62	40,84	**10B 248177/NWO/KR**
70	50	14,5	6,35	3,35	64,2	69	45,84	**10B 275196/NWO/KR**
80	60	14,5	6,35	3,35	74,3	79	55,8	**10B 314236/NWO/KR**
90	70	14,5	6,35	3,35	84,15	89	66,1	**10B 354275/NWO/KR**
100	80	14,5	6,35	3,35	94,15	99	75,84	**10B 393314/NWO/KR**
104,5	85	13	6,35	3,35	98,9	103,5	81,1	**10B 411334/NWO/KR**
110	90	13	6,35	3,1	104,15	109	85,9	**10B 433354/1/NWO/KR**
115	95	14,5	6,35	3,35	109,9	114	90,5	**10B 452374/NWO/KR**
125	105	12,5	6,35	3,35	119,15	124	101	**10B 492413/NWO/KR**

10KR					
D	**d**	**H**	**E**	**Q**	**Reference**
45	30	5,9	3,1	25,8	**10KR 177118**
50	30	6,4	3,35	25,8	**10KR 196118**
55	40	5,8	3,1	35,8	**10KR 216157**
60	40	6,3	3,35	36,1	**10KR 236157**
70	50	6,3	3,35	45,84	**10KR 275196**
80	60	6,3	3,35	55,8	**10KR 314236**

For prices and availability: **www.all-tec-business.net**

Fabric reinforced piston seal for open groove

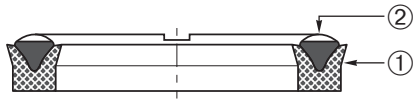

10DS

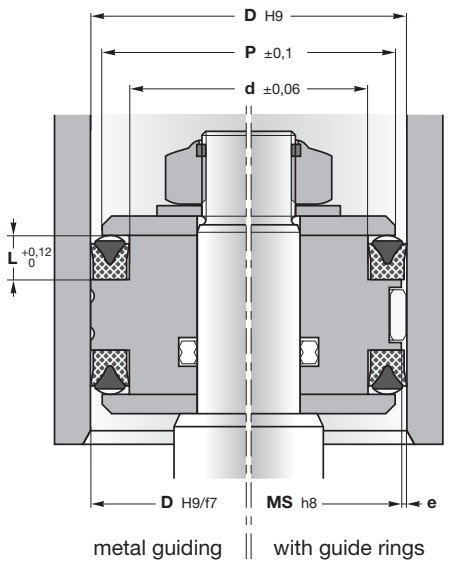

P = D - 3 mm

e (mm) ≤ 0,15

MS = D - 2e

Machining of housings: see pages 48-49

10DS is made of a fabric reinforced NBR chevron ring. The elastomere header ring energises the U-ring when pressure is applied.

This profile is generally used as piston seal, but it can be also used as rod seal.

Operating conditions	see page 8
Pressure	≤ 25 MPa
Temperature	-40°C to 120°C
Speed	≤ 0,5 m/s
Fluids	see pages 22-45

Materials	see pages 10-19
Sealing element ①	NBR8275-C
Energising ring ②	NBR8275

Assembly	see pages 54-59
On multi-piece pistons	

Advantages

Extrusion resistance at high pressure

Please contact us for applications approaching maximum values.

More information

On **www.all-tec-business.net**, click first on the reference and then on the material code to obtain the data sheet of the different materials.

For special requirements (fluid, temperature, pressure, speed...) or applications approaching maximum values, please contact us. Other materials available: **FPM**, **HNBR**, **TNBR**, **EPDM**...

D	d	L	Alternative reference	Reference
24	12	7,5		**10DS 094047**
40	25	10	15DSE 4025	**10DS 157098**
50	35	10	15DSE 5035	**10DS 196137**
55	40	9,5	15DSE 5540	**10DS 216157/1**
65	45	13,5		**10DS 255177**
70	50	13,5		**10DS 275196**
80	60	13,5		**10DS 314236**
90	70	13,5		**10DS 354275**
105	85	13,5	15DSE 10585	
110	90	13,5		**10DS 433354**
125	100	16,2	15DSE 125100	
140	115	16,2	15DSE 140115	
150	120	18,8	15DSE 150120	
160	130	18,8	15DSE 160130	
200	170	19,8	15DSE 200170	
225	195	19,8		**10DS 886767**
230	200	19,8		**10DS 905787**
250	220	19,8	15DSE 250220	**10DS 984866**
260	230	19,8		**10DS 1082965**
275	245	19,8		**10DS 1082965**
300	270	19,8		**10DS 11811062**

For prices and availability: **www.all-tec-business.net**

Fabric reinforced piston seal for open groove

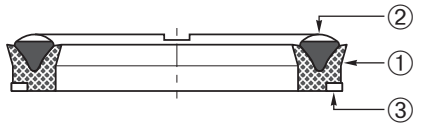

10DS.../NEO

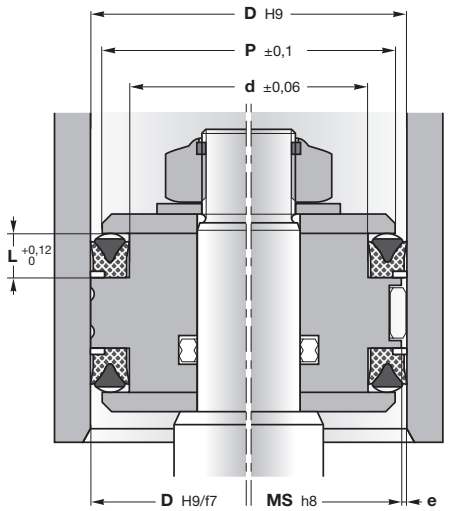

metal guiding || with guide rings

P = D - 3 mm

e (mm) ≤ 0,5

MS = D - 2e

Machining of housings: see pages 48-49

10DS.../NEO is made of a fabric reinforced chevron ring. The elastomere header ring energises the U-ring when pressure is applied.

10DS.../NEO has moreover a back-up ring on the outside diameter which enables **higher pressure conditions** and minimises the extrusion gap.

Operating conditions	**see page 8**
Pressure	≤ 50 MPa
Temperature	-40°C to 120°C
Speed	≤ 0,5 m/s
Fluids	**see pages 22-45**

Materials	**see pages 10-19**
Sealing element ①	N8T60-C
Energising ring ②	N9T60
Anti-extrusion ring ③	PO0WC

Assembly	**see pages 54-59**
On multi-piece pistons	

Advantages

Extrusion resistance at high pressure

Please contact us for applications approaching maximum values.

More information

On **www.all-tec-business.net**, click first on the reference and then on the material code to obtain the data sheet of the different materials.

For special requirements (fluid, temperature, pressure, speed...) or applications approaching maximum values, please contact us. Other materials available: **FPM**, **HNBR**, **TNBR**, **EPDM**...

D	d	L	Reference 15DSE.../NEO	Reference
63	48	10	**15DSE 6348/NEO**	**10DS 248188/NEO**
65	45	13,5	**15DSE 6545/NEO**	**10DS 255177/NEO**
70	50	13,5	**15DSE 7050/NEO**	**10DS 275196/NEO**
75	55	13,5	**15DSE 7555/NEO**	
80	60	13,5	**15DSE 8060/NEO**	**10DS 314236/NEO**
85	65	13,5		**10DS 334255/NEO**
90	70	13,5	**15DSE 9070/NEO**	**10DS 354275/NEO**
100	80	13,5	**15DSE 10080/NEO**	**10DS 393314/NEO**
100	80	13		**10DS 393314/1/NEO**
105	85	13,5		**10DS 413334/NEO**
110	90	13,5	**15DSE 11090/NEO**	**10DS 433354/NEO**
115	95	13,5	**15DSE 11595/NEO**	
120	100	13,5	**15DSE 120100/NEO**	**10DS 472393/NEO**
122	102	14,6		**10DS 480401/NEO**
125	100	16,2		**10DS 492393/NEO**
130	105	16,2		**10DS 511413/NEO**
140	115	16,2		**10DS 551452/NEO**
150	120	18,8		**10DS 590472/NEO**
160	130	18		**10DS 629511/NEO**

For prices and availability: **www.all-tec-business.net**

Fabric reinforced piston seal for open groove

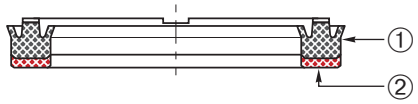

10DS.../M

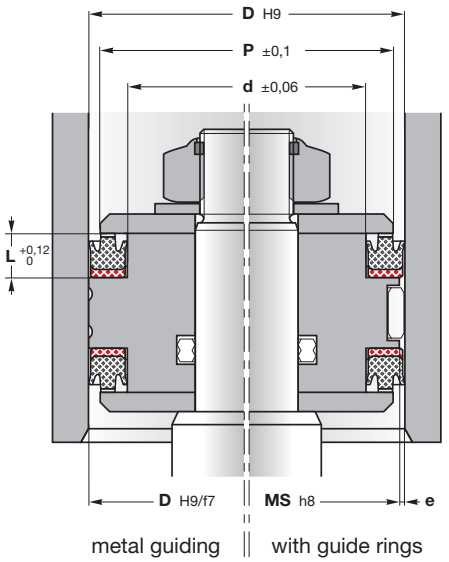

metal guiding || with guide rings

P = D - 3 mm

Standard : e (mm) ≤ 0,15

With POM AE-ring : e (mm) ≤ 0,5

MS = D - 2e

Machining of housings: see pages 48-49

10DS.../M is made of two different parts: the sealing element is realised in an elastomer rubber fabric and the back-up ring is printed with a very rigid special fabric which has a good antiextrusion resistance and assures a long life to seal element.

10DS.../M is generally used in double acting cylinders even for their little encumbrance.

Operating conditions	**see page 8**
Pressure	≤ 40 MPa
Temperature	-40°C to 120°C
Speed	≤ 0,5 m/s
Fluids	**see pages 22-45**

Materials	**see pages 10-19**
Sealing element ①	NBR8275-C
Anti-extrusion ring ②	Hard nitrile-fabric **On demand: acetal resin**

Assembly	**see pages 54-59**
On multi-piece pistons	

Advantages

Extrusion resistance at high pressure

Space-saving construction

Please contact us for applications approaching maximum values.

More information

On **www.all-tec-business.net**, click first on the reference and then on the material code to obtain the data sheet of the different materials.

For special requirements (fluid, temperature, pressure, speed...) or applications approaching maximum values, please contact us. Other materials available: **FPM**, **HNBR**, **TNBR**, **EPDM**...

D	d	L	Reference
40	25	10	**10DS 157098/M**
50	35	10	**10DS 196137/M**
60	45	10	**10DS 236177/M**
63	48	10	**10DS 248188/M**
80	60	13	**10DS 314236/M**
90	70	13	**10DS 354275/M**
100	80	13	**10DS 393314/M**
110	90	13	**10DS 433354/M**
115	90	16,2	**10DS 452354/M**
115	95	13	**10DS 452374/M**
125	100	16,2	**10DS 492393/M**
140	115	16,2	**10DS 551452/M**
150	120	19,8	**10DS 590472/M**
160	130	19,8	**10DS 629511/M**
180	150	19,8	**10DS 708590/M**
200	170	19,8	**10DS 787669/M**

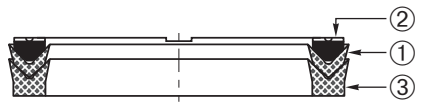

10CH3

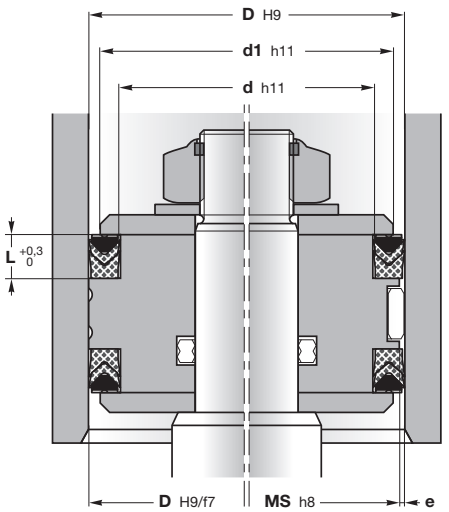

metal guiding || with guide rings

d1 = D - 3 mm

e (mm) ≤ 0,15

MS = D - 2e

Machining of housings: see pages 48-49

10CH3 is made of a support ring, one V-shaped sealing element and a pressure energising spreader ring. The base ring manufactured in cotton fabric reinforced rubber for a good anti-extrusion resistance guides and supports the V-ring for effective performance.

The fabric reinforced NBR V-ring is the main sealing element, being sensitive to pressure variations assuring good sealing performances in all conditions.

The energiser ring ensures uniform **pressure distribution** on the other rings. This element is produced in acetal resin.

Operating conditions	**see page 8**
Pressure	≤ 40 MPa
Temperature	-30°C to 120°C
Speed	≤ 0,5 m/s
Fluids	**see pages 22-45**

Materials	**see pages 10-19**
V-ring ①	NBR8470-C
Spreader ring ②	POM84
Base ring ③	NBR8470-C

Assembly	**see pages 54-59**
On multi-piece pistons	

Advantages

- Exceptional resistance to wear
- For difficult operating conditions

Please contact us for applications approaching maximum values.

More information

On **www.all-tec-business.net**, click first on the reference and then on the material code to obtain the data sheet of the different materials.

For special requirements (fluid, temperature, pressure, speed...) or applications approaching maximum values, please contact us. Other materials available: **FPM**, **HNBR**, **TNBR**, **EPDM**...

11CH3 FPM-C page 541

D	d	L	Reference
30	20	9,3	**10CH3-030**
32	20	10,9	**10CH3-032**
40	25	11,5	**10CH3-040**
45	30	11,5	**10CH3-045**
50	35	11,5	**10CH3-050**
55	40	11,5	**10CH3-055**
60	45	11,5	**10CH3-060**
63	48	13	**10CH3-063**
65	50	13	**10CH3-065**
70	50	15,2	**10CH3-070**
80	60	15,2	**10CH3-080**
90	70	21,2	**10CH3-090**
100	80	21,2	**10CH3-100**
110	90	21,2	**10CH3-110**
115	95	21,2	**10CH3-115**
125	100	25,8	**10CH3-125**
140	115	25,8	**10CH3-140**
150	120	29	**10CH3-150**
160	130	29	**10CH3-160**
180	150	31,5	**10CH3-180**
200	170	33,5	**10CH3-200**
220	190	33,5	**10CH3-220**
225	195	33,5	**10CH3-225**
240	210	33,5	**10CH3-240**
250	220	33,5	**10CH3-250**
275	245	33,5	**10CH3-275**
300	270	33,5	**10CH3-300**

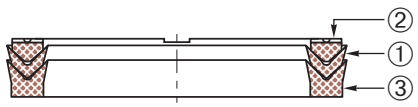

11CH3 FPM-C

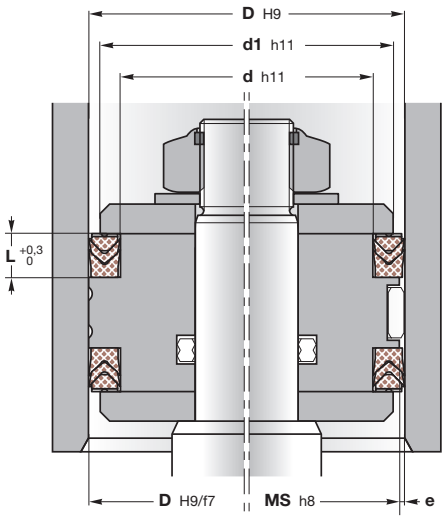

metal guiding | with guide rings

d1 = D - 3 mm

e (mm) ≤ 0,15

MS = D - 2e

Machining of housings: see pages 48-49

11CH3 FPM-C is made of a support ring, one V-shaped sealing element and a pressure energising spreader ring. The base ring manufactured in cotton fabric reinforced rubber for a good anti-extrusion resistance guides and supports the V-ring for effective performance.

The fabric reinforced FPM V-ring is the main sealing element being sensitive to pressure variations assuring good sealing performances in all conditions.

The energiser ring ensures uniform **pressure distribution** on the other rings. This element is produced in fabric reinforced FPM.

Operating conditions	**see page 8**
Pressure	≤ 40 MPa
Temperature	-10°C to 150°C
Speed	≤ 0,5 m/s
Fluids	**see pages 22-45**

Materials	**see pages 10-19**
V-Ring ①	FPM8471-C
Spreader ring ②	FPM8471-C
Base ring ③	FPM8471-C

Assembly	**see pages 54-59**
On multi-piece pistons	

Advantages

- High operating temperature capability
- Exceptional resistance to wear
- For difficult operating conditions

Please contact us for applications approaching maximum values.

More information

On **www.all-tec-business.net**, click first on the reference and then on the material code to obtain the data sheet of the different materials.

For special requirements (fluid, temperature, pressure, speed...) or applications approaching maximum values, please contact us. Other materials available: **FPM**, **HNBR**, **TNBR**, **EPDM**...

D	d	L	Reference
40	25	11,5	**11CH3-040 FPM-C**
50	35	11,5	**11CH3-050 FPM-C**
63	48	13	**11CH3-063 FPM-C**
80	60	15,2	**11CH3-080 FPM-C**
100	80	21,2	**11CH3-100 FPM-C**
125	100	25,8	**11CH3-125 FPM-C**
140	115	25,8	**11CH3-140 FPM-C**
160	130	29	**11CH3-160 FPM-C**
180	150	31,5	**11CH3-180 FPM-C**
200	170	33,5	**11CH3-200 FPM-C**
220	190	33,5	**11CH3-220 FPM-C**
250	220	33,5	**11CH3-250 FPM-C**
300	270	33,5	**11CH3-300 FPM-C**

PU piston seal with symmetrical lips

10MU — Profile a

10MU — Profile b

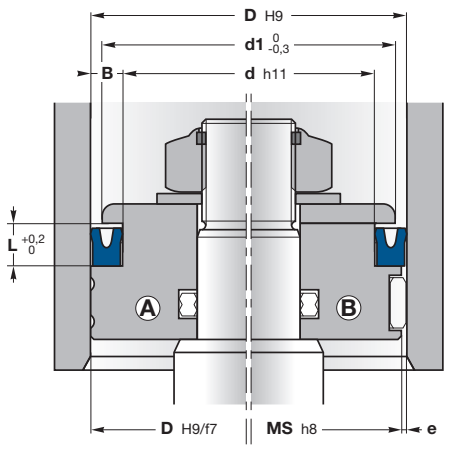

metal guiding | with guide rings

d1 = d + 1,4 B

MS = D - 2e

Machining of housings: see pages 48-49

Pressure (MPa)	e (mm)	
	D ≤ 60 mm	**D** > 60 mm
5	≤ 0,4	≤ 0,5
10	≤ 0,3	≤ 0,4
20	≤ 0,2	≤ 0,3
30	≤ 0,15	≤ 0,2
40	≤ 0,1	≤ 0,15

10MU is a high performance symmetrical lipseal which can be used in both rod and piston applications. With a wide range of dimensions, **10MU** has an efficient price-performance ratio.

They are produced in polyurethane that insures excellent wear resistance, extended service life and resistance against extrusion.

Operating conditions	see page 8
Pressure	≤ 40 MPa
Temperature	-30°C to 100°C
Speed	≤ 0,5 m/s
Fluids	see pages 22-45

Materials	see pages 10-19
Seal	PU08, PU09, PU10, PU12 or PU37

Assembly	see pages 54-59
On one-piece pistons Ⓐ	
On two-piece pistons Ⓑ	

Advantages

- Good price-performance ratio
- Symmetrical seal for rods and pistons
- Excellent abrasion resistance
- For new constructions we recommand RSE shape
- For MU seals with profile B, it's possible to put an O-ring between the lips of the seal to obtain the 10EUS profile.

Please contact us for applications approaching maximum values.

More information

On **www.all-tec-business.net**, click first on the reference and then on the material code to obtain the data sheet of the different materials.

For special requirements (fluid, temperature, pressure, speed...) or applications approaching maximum values, please contact us. Other materials available: **FPM**, **HNBR**, **TNBR**, **EPDM**...

D	d	L	☒	Alternative reference	Reference
9	3	5	a		**10MU 0903**
	4	4,5	a		**10MU 0904**
10	4	4,5	a		**10MU 1004**
	4	5	a	15MUE 1004/1	**10MU 1004/1**
11	4,5	5,5	a		**10MU 1104**
12	4	4,5	a		**10MU 1204**
	5	5	a		**10MU 1205/4**
	5	5,5	a	15MUE 1205/1	**10MU 1205/1**
	5	6,5	a	15MUE 1205/2	**10MU 1205/2**
	5	7	a		**10MU 1205**
	6	4,5	a	15MUE 1206	**10MU 1206**
	6	6	a	15MUE 1206/4	**10MU 1206/4**
	6	6,5	a	15MUE 1206/5	**10MU 1206/5**
	6	9	a		**10MU 1206/2**
	8	3,5	a	15MUE 1208	**10MU 1208**
12,5	4,5	5	a		**10MU 1205/3**
12,7	5	9	a		**10MU 1305/1**
	6	6,5	a		**10MU 1306**
	6,3	4,5	a		**10MU 1206/3**
13	5	4,5	a		**10MU 1305**
14	7	4,2	a		**10MU 1407**
	8	7	a	15MUE 1408	**10MU 1408**
15	6	9	a	15MUE 1506	**10MU 1506**
	7	4,5	a		**10MU 1507**
	7	8	a		**10MU 1507/1**
	8	6,3	a	15MUE 1508	**10MU 1508**
	8	9	a	15MUE 1508/2	**10MU 1508/2**
	9	9	a		**10MU 1509**
16	6	5,5	a		**10MU 1606**
	8	4,5	a		**10MU 1608**
	8	6,3	a	15MUE 1608/2	**10MU 1608/2**
	8	8	a		**10MU 1608/3**
	10	4,5	a		**10MU 1610/1**
	10	6,5	a	15MUE 1610	**10MU 1610**
17	5	10	b		**10MU 1705**
	11	5	a		**10MU 1711**

D	d	L	☒	Alternative reference	Reference
18	8	5,5	a		**10MU 1808**
	8	8	a		**10MU 1808/1**
	8	10	b		**10MU 1808/2**
	10	4,5	a		**10MU 1810/3**
	10	6	b		**10MU 1810/1**
	10	7	a	15MUE 1810	**10MU 1810**
	10	9	a	15MUE 1810/4	**10MU 1810/4**
	12	5,5	a	15MUE 1812	**10MU 1812**
	12	7	a	15MUE 1812/1	**10MU 1812/1**
19	9	7	a	15MUE 1909/1	**10MU 1909/1**
20	8	7	a		**10MU 2008**
	8	9	a		**10MU 2008/1**
	10	5,5	a		**10MU 2010**
	10	8	a		**10MU 2010/2**
	10	9	b	15MUE 2010/1	**10MU 2010/1**
	12	4,5	a	15MUE 2012/1	**10MU 2012/1**
	12	8	a		**10MU 2012/2**
	12	9	a	15MUE 2012	**10MU 2012**
	13	7	a		**10MU 2013**
	14	5,3	a	15MUE 2014	**10MU 2014**
20,6	14,3	5,5	a		**10MU 2114**
21	13	6,5	a		**10MU 2113**
	14,7	7	a		**10MU 2114/1**
22	8	9	a	15MUE 2208	**10MU 2208**
	9	9,5	a		**10MU 2209**
	10	7	a		**10MU 2210**
	10	9	b		**10MU 2210/1**
	12	6	b		**10MU 2212**
	12	8	b	15MUE 2212/4	**10MU 2212/4**
	12	9	b	15MUE 2212/1	**10MU 2212/1**
	14	4,5	a		**10MU 2214**
	14	7	a	15MUE 2214/1	**10MU 2214/1**
	14	9	a	15MUE 2214/2	**10MU 2214/2**
	14	12	a		**10MU 2214/3**
	16	4,5	a		**10MU 2216**
	16	5,5	a		**10MU 2216/2**

References 10MU and 10MU.../ROD are identical seals.

10MU seals with diameters between 20 and 1500 mm can be manufactured within short delivery time.
For prices and availability: **www.all-tec-business.net**

PU piston seal with symmetrical lips

10MU — Profile a

10MU — Profile b

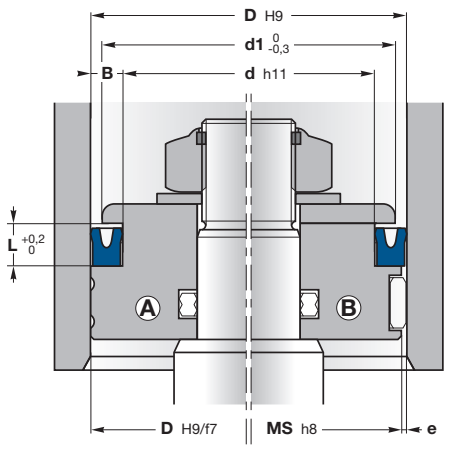

metal guiding | with guide rings

d1 = d + 1,4 B

MS = D - 2e

Machining of housings: see pages 48-49

Pressure (MPa)	e (mm)	
	D ≤ 60 mm	**D** > 60 mm
5	≤ 0,4	≤ 0,5
10	≤ 0,3	≤ 0,4
20	≤ 0,2	≤ 0,3
30	≤ 0,15	≤ 0,2
40	≤ 0,1	≤ 0,15

10MU is a high performance symmetrical lipseal which can be used in both rod and piston applications. With a wide range of dimensions, **10MU** has an efficient price-performance ratio.

They are produced in polyurethane that insures excellent wear resistance, extended service life and resistance against extrusion.

Operating conditions	see page 8
Pressure	≤ 40 MPa
Temperature	-30°C to 100°C
Speed	≤ 0,5 m/s
Fluids	see pages 22-45

Materials	see pages 10-19
Seal	PU08, PU09, PU10, PU12 or PU37

Assembly	see pages 54-59
On one-piece pistons Ⓐ	
On two-piece pistons Ⓑ	

Advantages

- Good price-performance ratio
- Symmetrical seal for rods and pistons
- Excellent abrasion resistance
- For new constructions we recommand RSE shape
- For MU seals with profile B, it's possible to put an O-ring between the lips of the seal to obtain the 10EUS profile.

Please contact us for applications approaching maximum values.

More information

On **www.all-tec-business.net**, click first on the reference and then on the material code to obtain the data sheet of the different materials.

For special requirements (fluid, temperature, pressure, speed...) or applications approaching maximum values, please contact us. Other materials available: **FPM**, **HNBR**, **TNBR**, **EPDM**...

D	d	L	⊠	Alternative reference	Reference
24	12	6,5	a		**10MU 2412**
	12	9	b	**15MUE 2412/1**	**10MU 2412/1**
	14	5,5	a		**10MU 2414/1**
	14	9	b	**15MUE 2414**	**10MU 2414**
	16	4,5	a		**10MU 2416/1**
	16	6	a	**15MUE 2416/2**	**10MU 2416/2**
	16	7	a		**10MU 2416/4**
	16	9	a		**10MU 2416/3**
	16	10	a	**15MUE 2416**	**10MU 2416**
25	10	8	a		**10MU 2510**
	12	9	a	**15MUE 2512/1**	**10MU 2512/1**
	12	11	a		**10MU 2512**
	13	6,5	a		**10MU 2513**
	13	10	a		**10MU 2513/1**
	15	5,5	a		**10MU 2515/1**
	15	9	b	**15MUE 2515/2**	**10MU 2515/2**
	15	11	b		**10MU 2515**
	16	9	a		**10MU 2516/1**
	17	4,5	a		**10MU 2517**
	17	6,5	a		**10MU 2517/1**
	17	11	a		**10MU 2517/2**
	18	5,5	a	**15MUE 2518**	**10MU 2518**
	18	7	a	**15MUE 2518/1**	**10MU 2518/1**
	19	3,5	a		**10MU 2519/1**
	19	7	a	**15MUE 2519**	**10MU 2519**
25,4	15,9	7	a		**10MU 2516**
26	16	6	b	**15MUE 2616**	**10MU 2616**
	16	9	b	**15MUE 2616/1**	**10MU 2616/1**
	16	11	a		**10MU 2616/2**
	18	4,5	a	**15MUE 2618/1**	**10MU 2618/1**
	18	7,5	a	**15MUE 2618**	**10MU 2618**
	18	9	a	**15MUE 2618/4**	**10MU 2618/4**
	20	3,8	a		**10MU 2620/1**
	20	6	a		**10MU 2620**
27	14	8	b		**10MU 2714**
	15	7	a		**10MU 2715**
	15	10	a		**10MU 2715/1**
	17	7,5	a		**10MU 2717**

D	d	L	⊠	Alternative reference	Reference
28	16	7	b	**15MUE 2816**	**10MU 2816**
	18	5,5	a		**10MU 2818**
	18	6,3	a		**10MU 2818/2**
	18	9	b	**15MUE 2818/1**	**10MU 2818/1**
	20	5	a	**15MUE 2820**	**10MU 2820**
	20	5,5	a		**10MU 2820/1**
	20	7	a		**10MU 2820/2**
	20	8	a		**10MU 2820/4**
	20	9	a	**15MUE 2820/3**	**10MU 2820/3**
	22	5	a		**10MU 2822/1**
	22	9	a	**15MUE 2822**	**10MU 2822**
29	20	5,5	b		**10MU 2920**
30	15	8	a		**10MU 3015**
	18	6,5	a		**10MU 3018**
	18	9	a	**15MUE 3018/1**	**10MU 3018/1**
	20	5,5	a		**10MU 3020/1**
	20	8	a		**10MU 3020/3**
	20	9	a	**15MUE 3020/2**	**10MU 3020/2**
	20	11	b	**15MUE 3020**	**10MU 3020**
	22	4,5	a		**10MU 3022/1**
	22	7	a	**15MUE 3022/2**	**10MU 3022/2**
	22	7,5	a		**10MU 3022**
	22	9	a		**10MU 3022/4**
	22	11	a	**15MUE 3022/3**	**10MU 3022/3**
32	16	9	a	**15MUE 3216**	**10MU 3216**
	20	6	a		**10MU 3220**
	20	6,5	a		**10MU 3220/4**
	20	8,5	b	**15MUE 3220/2**	**10MU 3220/2**
	20	10	a		**10MU 3220/1**
	22	5,5	a		**10MU 3222/1**
	22	9	b	**15MUE 3222**	**10MU 3222**
	22	11	b	**15MUE 3222/2**	**10MU 3222/2**
	24	4,5	a		**10MU 3224/2**
	24	6,5	a		**10MU 3224/3**
	24	7,5	a		**10MU 3224/1**
	24	8	a		**10MU 3224/4**
33	23	8	a		**10MU 3323/1**
	25	4,5	a		**10MU 3325/1**
	25	5,5	a		**10MU 3325/2**
	25	7,5	a		**10MU 3325**

References 10MU and 10MU.../ROD are identical seals.

10MU seals with diameters between 20 and 1500 mm can be manufactured within short delivery time.
For prices and availability: **www.all-tec-business.net**

PU piston seal with symmetrical lips

10MU — Profile a

10MU — Profile b

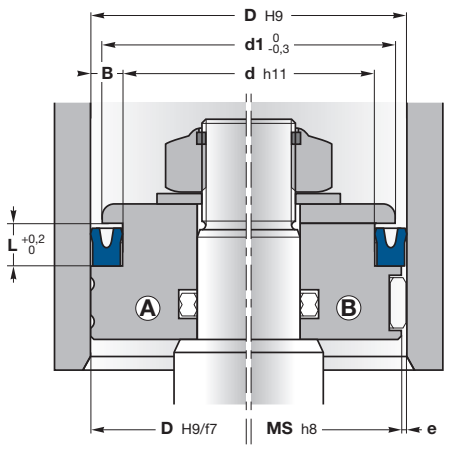

metal guiding | with guide rings

d1 = d + 1,4 B

MS = D - 2e

Machining of housings: see pages 48-49

Pressure (MPa)	e (mm)	
	D ≤ 60 mm	**D** > 60 mm
5	≤ 0,4	≤ 0,5
10	≤ 0,3	≤ 0,4
20	≤ 0,2	≤ 0,3
30	≤ 0,15	≤ 0,2
40	≤ 0,1	≤ 0,15

10MU is a high performance symmetrical lipseal which can be used in both rod and piston applications. With a wide range of dimensions, **10MU** has an efficient price-performance ratio.

They are produced in polyurethane that insures excellent wear resistance, extended service life and resistance against extrusion.

Operating conditions	see page 8
Pressure	≤ 40 MPa
Temperature	-30°C to 100°C
Speed	≤ 0,5 m/s
Fluids	see pages 22-45

Materials	see pages 10-19
Seal	PU08, PU09, PU10, PU12 or PU37

Assembly	see pages 54-59
On one-piece pistons Ⓐ	
On two-piece pistons Ⓑ	

Advantages

- Good price-performance ratio
- Symmetrical seal for rods and pistons
- Excellent abrasion resistance
- For new constructions we recommand RSE shape
- For MU seals with profile B, it's possible to put an O-ring between the lips of the seal to obtain the 10EUS profile.

Please contact us for applications approaching maximum values.

More information

On **www.all-tec-business.net**, click first on the reference and then on the material code to obtain the data sheet of the different materials.

For special requirements (fluid, temperature, pressure, speed...) or applications approaching maximum values, please contact us. Other materials available: **FPM**, **HNBR**, **TNBR**, **EPDM**...

D	d	L	⊠	Alternative reference	Reference
34	22	6,5	a		**10MU 3422**
	24	5,5	a		**10MU 3424**
	26	4,5	a		**10MU 3426**
35	15	11	a		**10MU 3515**
	20	10	a		**10MU 3520/2**
	20	13	a	**15MUE 3520**	**10MU 3520**
	22	6	a		**10MU 3522/1**
	22	11	b	**15MUE 3522**	**10MU 3522**
	23	6,5	a		**10MU 3523**
	25	5,5	b	**15MUE 3525/1**	**10MU 3525/1**
	25	8	a		**10MU 3525/3**
	25	9	b	**15MUE 3525/2**	**10MU 3525/2**
	25	11	b	**15MUE 3525**	**10MU 3525**
	27	6,5	a		**10MU 3527**
	28	5,5	a		**10MU 3528**
36	22	11	a		**10MU 3622**
	24	6,5	a		**10MU 3624**
	24	10	a		**10MU 3624/1**
	26	8	a		**10MU 3626/1**
	28	7,5	a	**15MUE 3628**	**10MU 3628**
	30	4,5	a		**10MU 3630**
37	25	6,5	a		**10MU 3725**
	25	10	a		**10MU 3725/1**
	29	4,5	a		**10MU 3729**
	30	7	a		**10MU 3730**
38	18	11	a		**10MU 3818**
	25	9	b		**10MU 3825**
	25	11	b	**15MUE 3825/2**	**10MU 3825/2**
	26	6,5	a		**10MU 3826**
	28	8	b		**10MU 3828/3**
	28	9	b	**15MUE 3828/1**	**10MU 3828/1**
	28	11	b		**10MU 3828/2**
	30	4,5	a		**10MU 3830/1**
	30	6,5	a	**15MUE 3830/2**	**10MU 3830/2**
	30	8	a		**10MU 3830**
38,1	25	7	a		**10MU 3825/1**
39	20	11	a		**10MU 3920**

D	d	L	⊠	Alternative reference	Reference
40	20	11	b	**15MUE 4020/1**	**10MU 4020/1**
	20	12	a		**10MU 4020**
	20	13	a		**10MU 4020/2**
	22	11	b		**10MU 4022**
	25	8	a		**10MU 4025**
	25	11	b	**15MUE 4025/1**	**10MU 4025/1**
	28	6,5	a		**10MU 4028**
	28	11	b	**15MUE 4028/1**	**10MU 4028/1**
	30	5,5	b	**15MUE 4030/1**	**10MU 4030/1**
	30	7	b		**10MU 4030/2**
	30	8	a		**10MU 4030/3**
	30	9	a		**10MU 4030/4**
	30	11	a	**15MUE 4030**	**10MU 4030**
	32	4,5	a		**10MU 4032/1**
	32	6	b		**10MU 4032**
	32	9	b	**15MUE 4032/3**	**10MU 4032/3**
41,3	28,6	9	a		**10MU 4129**
42	30	6,5	a		**10MU 4230/1**
	30	10	b	**15MUE 4230**	**10MU 4230**
	30	11	b	**15MUE 4230/2**	**10MU 4230/2**
	32	5,5	a		**10MU 4232/1**
	32	8	a		**10MU 4232/2**
	32	11	b	**15MUE 4232**	**10MU 4232**
	34	6,5	a		**10MU 4234**
43	33	5,5	a		**10MU 4333**
	35	9	a		**10MU 4335/2**
44	32	6,5	a		**10MU 4432**
	32	10	a		**10MU 4432/1**
	34	8	a		**10MU 4434/1**
45	25	11	a		**10MU 4525**
	30	10	a		**10MU 4530**
	30	11	b	**15MUE 4530/1**	**10MU 4530/1**
	32	11	b	**15MUE 4532**	**10MU 4532**
	34	8	b		**10MU 4534/1**
	34	10	b		**10MU 4534**
	35	5,5	a		**10MU 4535**
	35	7	b		**10MU 4535/4**
	35	8	b		**10MU 4535/5**

References 10MU and 10MU.../ROD are identical seals.

10MU seals with diameters between 20 and 1500 mm can be manufactured within short delivery time.
For prices and availability: **www.all-tec-business.net**

PU piston seal with symmetrical lips

10MU ☒ Profile a

10MU ☒ Profile b

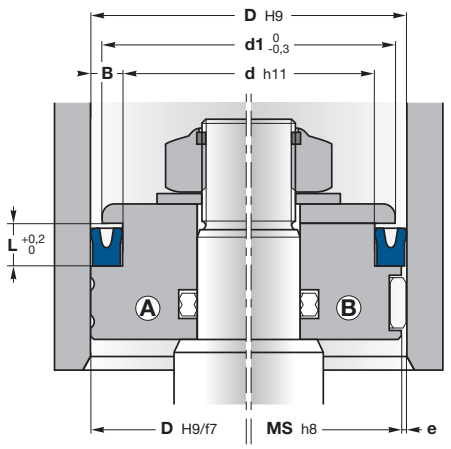

metal guiding | with guide rings

d1 = d + 1,4 B

MS = D - 2e

Machining of housings: see pages 48-49

Pressure (MPa)	e (mm)	
	D ≤ 60 mm	**D** > 60 mm
5	≤ 0,4	≤ 0,5
10	≤ 0,3	≤ 0,4
20	≤ 0,2	≤ 0,3
30	≤ 0,15	≤ 0,2
40	≤ 0,1	≤ 0,15

10MU is a high performance symmetrical lipseal which can be used in both rod and piston applications. With a wide range of dimensions, **10MU** has an efficient price-performance ratio.

They are produced in polyurethane that insures excellent wear resistance, extended service life and resistance against extrusion.

Operating conditions	see page 8
Pressure	≤ 40 MPa
Temperature	-30°C to 100°C
Speed	≤ 0,5 m/s
Fluids	see pages 22-45

Materials	see pages 10-19
Seal	PU08, PU09, PU10, PU12 or PU37

Assembly	see pages 54-59
On one-piece pistons Ⓐ	
On two-piece pistons Ⓑ	

Advantages

- Good price-performance ratio
- Symmetrical seal for rods and pistons
- Excellent abrasion resistance
- For new constructions we recommand RSE shape
- For MU seals with profile B, it's possible to put an O-ring between the lips of the seal to obtain the 10EUS profile.

Please contact us for applications approaching maximum values.

More information

On **www.all-tec-business.net**, click first on the reference and then on the material code to obtain the data sheet of the different materials.

For special requirements (fluid, temperature, pressure, speed...) or applications approaching maximum values, please contact us. Other materials available: **FPM**, **HNBR**, **TNBR**, **EPDM**...

D	d	L	☒	Alternative reference	Reference
45	35	9	b	15MUE 4535/2	10MU 4535/2
	35	11	b	15MUE 4535/3	10MU 4535/3
	35,5	7,5	a		10MU 4535/6
	37	6,5	a		10MU 4537
	38	5,5	a		10MU 4538
46	36	5,5	a		10MU 4636/1
	36	8	b		10MU 4636
	38	6,5	a		10MU 4638/1
	38	7,5	b		10MU 4638
47	36	10	a		10MU 4735/1
48	32	11	a		10MU 4832
	36	11	b	15MUE 4835	10MU 4835
	36	6,5	a		10MU 4836/1
	36	9	a		10MU 4836
	38	5,5	a		10MU 4838
	40	6,5	a		10MU 4840
	40	7	a		10MU 4840/3
	40	9	a	15MUE 4840/2	10MU 4840/2
	40	12	a	15MUE 4840/1	10MU 4840/1
50	30	11	b	15MUE 5030	10MU 5030
	30	13	b	15MUE 5030/1	10MU 5030/1
	32	13	a		10MU 5032/1
	36	8	a		10MU 5035
	36	11	b	15MUE 5035/1	10MU 5035/1
	38	6,5	a		10MU 5038
	38	10	a	15MUE 5038/1	10MU 5038/1
	38	12	a		10MU 5038/2
	40	5,5	b		10MU 5040/2
	40	7	a		10MU 5040/4
	40	7,5	b	15MUE 5040	10MU 5040
	40	9	b		10MU 5040/3
	40	11	b	15MUE 5040/1	10MU 5040/1
	42	6,5	b		10MU 5042/1
	42	9	b		10MU 5042
	44	9,5	a		10MU 5044
50,8	41,3	6	a		10MU 5141/1

D	d	L	☒	Alternative reference	Reference
52	32	11	a		10MU 5232
	40	6,5	a		10MU 5240/1
	40	9	a		10MU 5240
	40	11	a		10MU 5240/2
	42	5,5	a		10MU 5242
	42	10	a		10MU 5242/1
53	38	9	a		10MU 5338
	43	8	a		10MU 5343/1
	45	7,5	b		10MU 5345
	45	11	a		10MU 5345/1
	45	13	a		10MU 5345/2
54	42	6,5	a		10MU 5442
	44	5,5	a		10MU 5444
	44	8	a		10MU 5444/1
55	36	11	b		10MU 5535
	36	13	a	15MUE 5535/1	10MU 5535/1
	38	11	b	15MUE 5538	10MU 5538
	40	8	a		10MU 5540/3
	40	11	a	15MUE 5540	10MU 5540
	45	7	a	15MUE 5545/5	10MU 5545/5
	45	7,5	b	15MUE 5545	10MU 5545
	45	9	a		10MU 5545/3
	45	11	b	15MUE 5545/1	10MU 5545/1
	45	13	a		10MU 5545/4
56	40	11	a	15MUE 5640	10MU 5640
	44	6,5	a		10MU 5644
	45	8	b		10MU 5645
	46	5,5	a		10MU 5646
	46	8	a		10MU 5646/1
58	38	11	a		10MU 5838
	45	11	a		10MU 5845/2
	46	6,5	a		10MU 5846
	48	11	b		10MU 5848
	50	5,5	a		10MU 5850
60	36	13	a		10MU 6035
	40	11	b	15MUE 6040/1	10MU 6040/1
	40	13	a		10MU 6040/4
	40	14	b	15MUE 6040/2	10MU 6040/2
	40	19	a	15MUE 6040/3	10MU 6040/3
	45	8	a		10MU 6045/1

References 10MU and 10MU.../ROD are identical seals.

10MU seals with diameters between 20 and 1500 mm can be manufactured within short delivery time.
For prices and availability: **www.all-tec-business.net**

PU piston seal with symmetrical lips

10MU — Profile a

10MU — Profile b

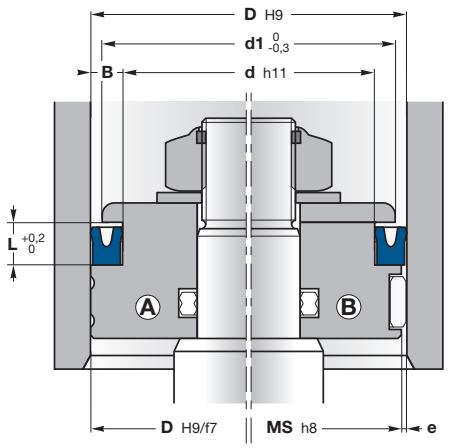

metal guiding | with guide rings

d1 = d + 1,4 B

MS = D - 2e

Machining of housings: see pages 48-49

Pressure (MPa)	e (mm)	
	D ≤ 60 mm	**D** > 60 mm
5	≤ 0,4	≤ 0,5
10	≤ 0,3	≤ 0,4
20	≤ 0,2	≤ 0,3
30	≤ 0,15	≤ 0,2
40	≤ 0,1	≤ 0,15

10MU is a high performance symmetrical lipseal which can be used in both rod and piston applications. With a wide range of dimensions, **10MU** has an efficient price-performance ratio.

They are produced in polyurethane that insures excellent wear resistance, extended service life and resistance against extrusion.

Operating conditions	see page 8
Pressure	≤ 40 MPa
Temperature	-30°C to 100°C
Speed	≤ 0,5 m/s
Fluids	see pages 22-45

Materials	see pages 10-19
Seal	PU08, PU09, PU10, PU12 or PU37

Assembly	see pages 54-59
On one-piece pistons Ⓐ	
On two-piece pistons Ⓑ	

Advantages

- Good price-performance ratio
- Symmetrical seal for rods and pistons
- Excellent abrasion resistance
- For new constructions we recommand RSE shape
- For MU seals with profile B, it's possible to put an O-ring between the lips of the seal to obtain the 10EUS profile.

Please contact us for applications approaching maximum values.

More information

On **www.all-tec-business.net**, click first on the reference and then on the material code to obtain the data sheet of the different materials.

For special requirements (fluid, temperature, pressure, speed...) or applications approaching maximum values, please contact us. Other materials available: **FPM**, **HNBR**, **TNBR**, **EPDM**...

D	d	L	☒	Alternative reference	Reference
60	45	11	b	15MUE 6045	10MU 6045
	45	13	a		10MU 6045/2
	48	6,5	a		10MU 6048
	48	10	a		10MU 6048/1
	50	5,5	a		10MU 6050/2
	50	7	b		10MU 6050/3
	50	8	b		10MU 6050/6
	50	9	a		10MU 6050/5
	50	11	b	15MUE 6050	10MU 6050
	50	12	a	15MUE 6050/1	10MU 6050/1
	50	13	b		10MU 6050/4
	52	6,5	a		10MU 6052
62	42	13	b		10MU 6242
	50	10	b	15MUE 6250	10MU 6250
	52	13	a		10MU 6252
63	45	11	b	15MUE 6345	10MU 6345
	48	11	a		10MU 6348
	50	7	b	15MUE 6350	10MU 6350
	51	6,5	a		10MU 6351
	51	10	a		10MU 6351/1
	53	5,5	a		10MU 6353/1
	53	7,5	b	15MUE 6353	10MU 6353
	53	8	a		10MU 6353/2
	53	13	a		10MU 6353/3
64	46,3	9,5	a		10MU 6446
	52	6,5	a		10MU 6452
65	40	13	a		10MU 6540
	45	11	b	15MUE 6545	10MU 6545
	45	13	b	15MUE 6545/1	10MU 6545/1
	50	8	a		10MU 6550/2
	50	11	b	15MUE 6550/1	10MU 6550/1
	50	12	a		10MU 6550
	50	12,5	a		10MU 6550
	53	6,5	a		10MU 6553
	55	5,5	a		10MU 6555/2
	55	7	b		10MU 6555/4
	55	11	b	15MUE 6555/1	10MU 6555/1
	55	13	a	15MUE 6555	10MU 6555

D	d	L	☒	Alternative reference	Reference
66	56	5,5	b		10MU 6656
	56	8	a		10MU 6656/1
	56	11	a		10MU 6656/2
	56	12	a		10MU 6656/3
68	50	11	a		10MU 6850
70	36	11	a		10MU 7036
	40	16	a		10MU 7040
	45	13	a		10MU 7045
	50	11	b	15MUE 7050/1	10MU 7050/1
	50	13	b	15MUE 7050	10MU 7050
	50	16	a		10MU 7050/2
	50	19	a	15MUE 7050/3	10MU 7050/3
	54	13	a		10MU 7054
	55	8	a		10MU 7055/1
	55	11	a		10MU 7055
	55	12	a		10MU 7055/3
	55	13	b	15MUE 7055/2	10MU 7055/2
	60	5,5	b		10MU 7060/2
	60	7	b		10MU 7060/5
	60	9	b	15MUE 7060	10MU 7060
	60	11	b	15MUE 7060/3	10MU 7060/3
	60	13	b	15MUE 7060/1	10MU 7060/1
72	50	13	a		10MU 7250
	52	13	a		10MU 7252
	62	12	a		10MU 7262
73	57,1	12	a		10MU 7357
	63	5,5	a		10MU 7363
	63	7	b		10MU 7363/3
	63	8	a		10MU 7363/1
74	34	11	a		10MU 7434
75	40	11	a		10MU 7540
	50	13	a		10MU 7550
	55	11	a		10MU 7555

References 10MU and 10MU.../ROD are identical seals.

10MU seals with diameters between 20 and 1500 mm can be manufactured within short delivery time.
For prices and availability: **www.all-tec-business.net**

PU piston seal with symmetrical lips

10MU — Profile a

10MU — Profile b

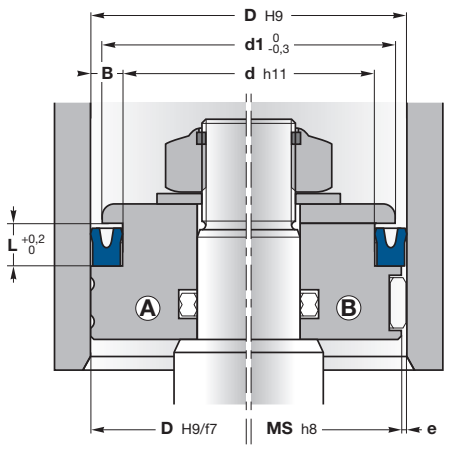

metal guiding | with guide rings

d1 = d + 1,4 B

MS = D - 2e

Machining of housings: see pages 48-49

Pressure (MPa)	e (mm)	
	D ≤ 60 mm	**D** > 60 mm
5	≤ 0,4	≤ 0,5
10	≤ 0,3	≤ 0,4
20	≤ 0,2	≤ 0,3
30	≤ 0,15	≤ 0,2
40	≤ 0,1	≤ 0,15

10MU is a high performance symmetrical lipseal which can be used in both rod and piston applications. With a wide range of dimensions, **10MU** has an efficient price-performance ratio.

They are produced in polyurethane that insures excellent wear resistance, extended service life and resistance against extrusion.

Operating conditions	see page 8
Pressure	≤ 40 MPa
Temperature	-30°C to 100°C
Speed	≤ 0,5 m/s
Fluids	see pages 22-45

Materials	see pages 10-19
Seal	PU08, PU09, PU10, PU12 or PU37

Assembly	see pages 54-59
On one-piece pistons Ⓐ	
On two-piece pistons Ⓑ	

Advantages

- Good price-performance ratio
- Symmetrical seal for rods and pistons
- Excellent abrasion resistance
- For new constructions we recommand RSE shape
- For MU seals with profile B, it's possible to put an O-ring between the lips of the seal to obtain the 10EUS profile.

Please contact us for applications approaching maximum values.

More information

On **www.all-tec-business.net**, click first on the reference and then on the material code to obtain the data sheet of the different materials.

For special requirements (fluid, temperature, pressure, speed...) or applications approaching maximum values, please contact us. Other materials available: **FPM**, **HNBR**, **TNBR**, **EPDM**...

D	d	L	☒	Alternative reference	Reference
75	55	13	b	15MUE 7555/1	10MU 7555/1
	60	8	a		10MU 7560/1
	60	11	b	15MUE 7560/2	10MU 7560/2
	60	13	b	15MUE 7560	10MU 7560
	63	10	a		10MU 7563/2
	63	11	b	15MUE 7563	10MU 7563
	65	5,5	a		10MU 7565/1
	65	7	b		10MU 7565/2
	65	8	a		10MU 7565/5
	65	10	a		10MU 7565/4
	65	11	a		10MU 7565/3
	65	13	b	15MUE 7565	10MU 7565
76	56	13	a		10MU 7656
	60	13	a		10MU 7660
	66	9	a		10MU 7666
77	67	11	b		10MU 7767/1
	67	13	a		10MU 7767
78	63	11	a		10MU 7863
80	50	11	a		10MU 8050
	55	13	a		10MU 8055
	55	15	a		10MU 8055/2
	60	11	b	15MUE 8060	10MU 8060
	60	13	b	15MUE 8060/1	10MU 8060/1
	60	16	a		10MU 8060/2
	60	19	a	15MUE 8060/3	10MU 8060/3
	64	13	a		10MU 8064
	65	8	a		10MU 8065/1
	65	11	b		10MU 8065/3
	65	12	a	15MUE 8065/2	10MU 8065/2
	65	13	b	15MUE 8065	10MU 8065
	66	11	a		10MU 8066
	66	14	a		10MU 8066/1
	70	5,5	b		10MU 8070/2
	70	7	b		10MU 8070/5
	70	8	a		10MU 8070/4
	70	9	b	15MUE 8070	10MU 8070
	70	11	b	15MUE 8070/3	10MU 8070/3
	70	13	b	15MUE 8070/1	10MU 8070/1
82	70	10	a		10MU 8270/1

D	d	L	☒	Alternative reference	Reference
83	63	13	a		10MU 8363/1
	63	16	a		10MU 8363
85	55	16	a		10MU 8555
	60	11	a		10MU 8560/2
	65	11	a		10MU 8565/1
	65	13	b	15MUE 8565	10MU 8565
	65	16	a		10MU 8565/2
	70	11	a		10MU 8570
	70	12	b		10MU 8570/1
	70	13	a	15MUE 8570/2	10MU 8570/2
	73	10	a		10MU 8573
	75	5,5	a		10MU 8575/1
	75	7	b		10MU 8575/3
	75	8	a		10MU 8575/4
	75	11	a		10MU 8575/2
	75	13	b	15MUE 8575	10MU 8575
90	60	16	a		10MU 9060
	70	11	a		10MU 9070/1
	70	13	b	15MUE 9070	10MU 9070
	70	16	a		10MU 9070/2
	70	19	a	15MUE 9070/3	10MU 9070/3
	75	8,5	b		10MU 9075/1
	75	11	b	15MUE 9075	10MU 9075
	75	13	b	15MUE 9075/2	10MU 9075/2
	80	5,5	b		10MU 9080
	80	7	b		10MU 9080/1
	80	8	a		10MU 9080/4
	80	9	b		10MU 9080/5
	80	11	b	15MUE 9080/2	10MU 9080/2
	80	13	b	15MUE 9080/3	10MU 9080/3
91	75	13	a		10MU 9175
92	76	13	a		10MU 9276
95	70	11	a		10MU 9570/2
	70	13	a		10MU 9570
	75	11	a		10MU 9575/3
	75	13	b	15MUE 9575/1	10MU 9575/1
	75	14,5	a		10MU 9575
	80	8	a		10MU 9580

References 10MU and 10MU.../ROD are identical seals.

10MU seals with diameters between 20 and 1500 mm can be manufactured within short delivery time.
For prices and availability: **www.all-tec-business.net**

PU piston seal with symmetrical lips

10MU ☒ Profile a

10MU ☒ Profile b

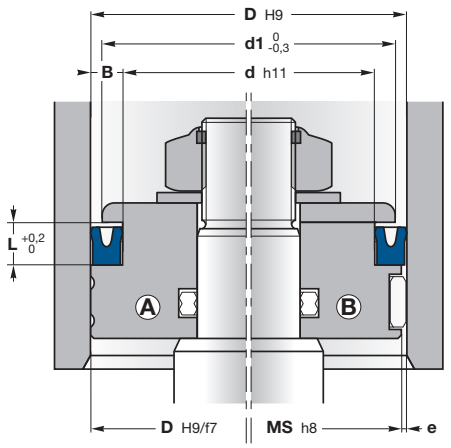

metal guiding || with guide rings

d1 = d + 1,4 B

MS = D - 2e

Machining of housings: see pages 48-49

Pressure (MPa)	e (mm)	
	D ≤ 60 mm	**D** > 60 mm
5	≤ 0,4	≤ 0,5
10	≤ 0,3	≤ 0,4
20	≤ 0,2	≤ 0,3
30	≤ 0,15	≤ 0,2
40	≤ 0,1	≤ 0,15

10MU is a high performance symmetrical lipseal which can be used in both rod and piston applications. With a wide range of dimensions, **10MU** has an efficient price-performance ratio.

They are produced in polyurethane that insures excellent wear resistance, extended service life and resistance against extrusion.

Operating conditions	see page 8
Pressure	≤ 40 MPa
Temperature	-30°C to 100°C
Speed	≤ 0,5 m/s
Fluids	**see pages 22-45**

Materials	see pages 10-19
Seal	PU08, PU09, PU10, PU12 or PU37

Assembly	see pages 54-59
On one-piece pistons Ⓐ	
On two-piece pistons Ⓑ	

Advantages

- Good price-performance ratio
- Symmetrical seal for rods and pistons
- Excellent abrasion resistance
- For new constructions we recommand RSE shape
- For MU seals with profile B, it's possible to put an O-ring between the lips of the seal to obtain the 10EUS profile.

Please contact us for applications approaching maximum values.

More information

On **www.all-tec-business.net**, click first on the reference and then on the material code to obtain the data sheet of the different materials.

For special requirements (fluid, temperature, pressure, speed...) or applications approaching maximum values, please contact us. Other materials available: **FPM**, **HNBR**, **TNBR**, **EPDM**...

D	d	L	☒	Alternative reference	Reference
95	80	11	a		**10MU 9580/2**
	80	13	b	15MUE 9580/1	**10MU 9580/1**
	83	10	a		**10MU 9583**
	85	5,5	a		**10MU 9585/1**
	85	9,5	b		**10MU 9585**
	85	13	b	15MUE 9585/3	**10MU 9585/3**
100	70	16	a		**10MU 10070**
	75	13	a		**10MU 10075**
	75	20	a		**10MU 10075/1**
	80	11	a	15MUE 10080/1	**10MU 10080/1**
	80	13	b	15MUE 10080	**10MU 10080**
	80	16	a		**10MU 10080/2**
	85	8	a		**10MU 10085/1**
	85	10	b		**10MU 10085/3**
	85	12	a		**10MU 10085/2**
	85	13	b	15MUE 10085	**10MU 10085**
	88	10	a		**10MU 10088**
	90	5,5	a		**10MU 10090/2**
	90	8	a		**10MU 10090/4**
	90	9	b		**10MU 10090**
	90	11	a		**10MU 10090/1**
	90	13	b	15MUE 10090/3	**10MU 10090/3**
101	85	13	a		**10MU 10185**
	86	13	a		**10MU 10186**
105	80	13	a		**10MU 10580**
	80	23	a		**10MU 10580/3**
	85	13	b		**10MU 10585/1**
	85	16	a		**10MU 10585**
	85	19	a		**10MU 10585/2**
	90	8	a		**10MU 10590/1**
	90	13	b		**10MU 10590**
	95	5,5	a		**10MU 10595/1**
107	95	10	a		**10MU 10795**
110	80	16	a		**10MU 11080**
	85	13	a		**10MU 11085**
	90	11	a		**10MU 11090/1**

D	d	L	☒	Alternative reference	Reference
110	90	13	b		**10MU 11090**
	90	16	a		**10MU 11090/2**
	90	19	a		**10MU 11090/3**
	95	13	b		**10MU 11095/1**
	95	16	a		**10MU 11095/2**
	100	5,5	a		**10MU 110100**
112	95	12	a		**10MU 112095/1**
	100	10	a		**10MU 112100**
	102	12	a		**10MU 112102**
114,3	88,9	15	a		**10MU 114089**
115	90	13	a		**10MU 115090**
	90	16	a		**10MU 115090/2**
	95	13	b		**10MU 115095**
	95	16	a		**10MU 115095/2**
	95	19	a		**10MU 115095/3**
	99	13	a		**10MU 115099**
	100	13	b		**10MU 115100**
	100	16	a		**10MU 115100/1**
	103	10	a		**10MU 115103**
117	105	10	a		**10MU 117105**
120	90	16	a		**10MU 120090**
	95	20	a		**10MU 120095/1**
	100	11	a		**10MU 120100/1**
	100	13	b		**10MU 120100**
	100	16	a		**10MU 120100/2**
	100	19	a		**10MU 120100/3**
	105	9	a		**10MU 120105/3**
	105	12	a		**10MU 120105/1**
	105	16	b		**10MU 120105/2**
121	111	6,5	a		**10MU 121111**
125	100	13	b		**10MU 125100**
	100	16	b		**10MU 125100/1**
	100	20	a		**10MU 125100/2**
	105	11	a		**10MU 125105/1**
	105	13	b		**10MU 125105**
	105	16	b		**10MU 125105/2**
	110	10	b		**10MU 125110/3**
	110	13	b		**10MU 125110/1**
	110	16	b		**10MU 125110/2**

References 10MU and 10MU.../ROD are identical seals.

10MU seals with diameters between 20 and 1500 mm can be manufactured within short delivery time.
For prices and availability: **www.all-tec-business.net**

PU piston seal with symmetrical lips

10MU ☒ Profile a

10MU ☒ Profile b

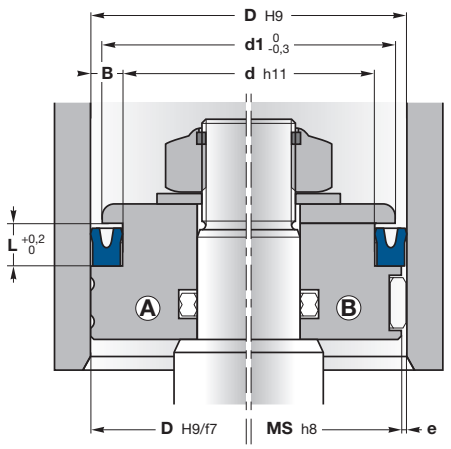

d1 = d + 1,4 B

MS = D - 2e

Machining of housings: see pages 48-49

Pressure (MPa)	e (mm)	
	D ≤ 60 mm	**D** > 60 mm
5	≤ 0,4	≤ 0,5
10	≤ 0,3	≤ 0,4
20	≤ 0,2	≤ 0,3
30	≤ 0,15	≤ 0,2
40	≤ 0,1	≤ 0,15

10MU is a high performance symmetrical lipseal which can be used in both rod and piston applications. With a wide range of dimensions, **10MU** has an efficient price-performance ratio.

They are produced in polyurethane that insures excellent wear resistance, extended service life and resistance against extrusion.

Operating conditions	**see page 8**
Pressure	≤ 40 MPa
Temperature	-30°C to 100°C
Speed	≤ 0,5 m/s
Fluids	**see pages 22-45**

Materials	**see pages 10-19**
Seal	PU08, PU09, PU10, PU12 or PU37

Assembly	**see pages 54-59**
On one-piece pistons Ⓐ	
On two-piece pistons Ⓑ	

Advantages

- Good price-performance ratio
- Symmetrical seal for rods and pistons
- Excellent abrasion resistance
- For new constructions we recommand RSE shape
- For MU seals with profile B, it's possible to put an O-ring between the lips of the seal to obtain the 10EUS profile.

Please contact us for applications approaching maximum values.

More information

On **www.all-tec-business.net**, click first on the reference and then on the material code to obtain the data sheet of the different materials.

For special requirements (fluid, temperature, pressure, speed...) or applications approaching maximum values, please contact us. Other materials available: **FPM**, **HNBR**, **TNBR**, **EPDM**...

D	d	L	☒	Alternative reference	Reference
130	100	16	a		**10MU 130100/1**
	105	13	a		**10MU 130105**
	110	11	a		**10MU 130110/2**
	110	13	a		**10MU 130110/1**
	110	16	b		**10MU 130110**
	110	19	a		**10MU 130110/3**
	115	8	a		**10MU 130115**
	115	11	a		**10MU 130115/3**
	115	12	a		**10MU 130115/1**
	115	16	a		**10MU 130115/2**
	118	11	a		**10MU 130118**
	120	15	a		**10MU 130120**
135	110	16	a		**10MU 135110/1**
	115	16	b		**10MU 135115**
	120	16	a		**10MU 135120**
	123	10	a		**10MU 135123**
137	125	10	a		**10MU 137125**
140	110	16	a		**10MU 140110**
	115	16	a		**10MU 140115/1**
	120	11	a		**10MU 140120/1**
	120	13	a		**10MU 140120**
	120	16	b		**10MU 140120/2**
	125	12	b		**10MU 140125**
	125	16	b		**10MU 140125/2**
145	125	13	a		**10MU 145125/2**
	125	16	b		**10MU 145125**
	125	19	a		**10MU 145125/1**
	130	13			**10MU 145130**
	130	16	a		**10MU 145130/2**
150	130	16	b		**10MU 150130/1**
	135	16	a		**10MU 150135/1**
	138	10	a		**10MU 150138**
155	125	16	a		**10MU 155125**
	130	20	a		**10MU 155130/1**
	135	16	a		**10MU 155135**

D	d	L	☒	Alternative reference	Reference
160	130	19	a		**10MU 160130**
	135	13	a		**10MU 160135**
	135	16	a		**10MU 160135/1**
	140	11	a		**10MU 160140**
	140	13	a		**10MU 160140/2**
	140	16	b		**10MU 160140/1**
165	140	16	a		**10MU 165140/1**
	145	16	b		**10MU 165145**
170	145	20	a		**10MU 170145/1**
	150	10	a		**10MU 170150**
	150	16	b		**10MU 170150/2**
	155	12	a		**10MU 170155**
	158	10	a		**10MU 170158**
175	160	12	a		**10MU 175160**
180	160	16	b		**10MU 180160**
185	165	16	a		**10MU 185165**
	170	12	a		**10MU 185170**
190	170	13	b		**10MU 190170/1**
	170	16	b		**10MU 190170**
195	180	12	a		**10MU 195180**
200	170	16	a		**10MU 200170**
	170	19	a		**10MU 200170/1**
	175	16	b		**10MU 200175/1**
	180	13	a		**10MU 200180/2**
	180	16	b		**10MU 200180**
	188	10	a		**10MU 200188**
220	190	23	a		**10MU 220190**
	200	13	b		**10MU 220200**
	200	16	a	**15MUE 220200/1**	**10MU 220200/1**
225	200	19	b		**10MU 225200/2**
240	210	18	a		**10MU 240210**
250	220	16	a		**10MU 250220/2**
	220	19	b		**10MU 250220**
	220	22	a		**10MU 250220/1**
	230	16	a		**10MU 250230**
270	250	16	a		**10MU 270250**

References 10MU and 10MU.../ROD are identical seals.

10MU seals with diameters between 20 and 1500 mm can be manufactured within short delivery time.
For prices and availability: **www.all-tec-business.net**

PU piston seal with symmetrical lips

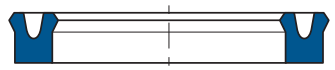

10MU — Profile a

10MU — Profile b

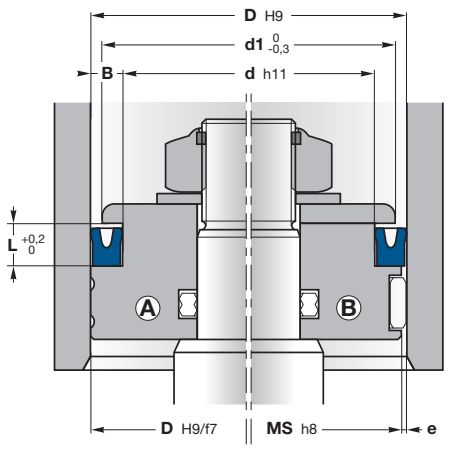

d1 = d + 1,4 B

MS = D - 2e

Machining of housings: see pages 48-49

Pressure (MPa)	e (mm)	
	D ≤ 60 mm	**D** > 60 mm
5	≤ 0,4	≤ 0,5
10	≤ 0,3	≤ 0,4
20	≤ 0,2	≤ 0,3
30	≤ 0,15	≤ 0,2
40	≤ 0,1	≤ 0,15

10MU is a high performance symmetrical lipseal which can be used in both rod and piston applications. With a wide range of dimensions, **10MU** has an efficient price-performance ratio.

They are produced in polyurethane that insures excellent wear resistance, extended service life and resistance against extrusion.

Operating conditions see page 8

Pressure	≤ 40 MPa
Temperature	-30°C to 100°C
Speed	≤ 0,5 m/s
Fluids	see pages 22-45

Materials see pages 10-19

Seal: PU08, PU09, PU10, PU12 or PU37

Assembly see pages 54-59

On one-piece pistons Ⓐ

On two-piece pistons Ⓑ

Advantages

- Good price-performance ratio
- Symmetrical seal for rods and pistons
- Excellent abrasion resistance
- For new constructions we recommand RSE shape
- For MU seals with profile B, it's possible to put an O-ring between the lips of the seal to obtain the 10EUS profile.

Please contact us for applications approaching maximum values.

More information

On **www.all-tec-business.net**, click first on the reference and then on the material code to obtain the data sheet of the different materials.

For special requirements (fluid, temperature, pressure, speed...) or applications approaching maximum values, please contact us. Other materials available: **FPM**, **HNBR**, **TNBR**, **EPDM**...

D	d	L	☒	Alternative reference	Reference
280	250	19	a		**10MU 280250**
290	270	18	a		**10MU 290270/1**
300	270	16	a		**10MU 300270**
	280	16	a		**10MU 300280**
320	290	19	a		**10MU 320290**
	300	16	a	**15MUE 320300**	**10MU 320300**
340	320	16	a	**15MUE 340320**	**10MU 340320**
360	340	16	a		**10MU 360340**
380	360	16	a	**15MUE 380360**	**10MU 380360**

References 10MU and 10MU.../ROD are identical seals.

10MU seals with diameters between 20 and 1500 mm can be manufactured within short delivery time.
For prices and availability: **www.all-tec-business.net**

PU single acting piston seal with asymmetrical lips

10RSE

10RSE.../M

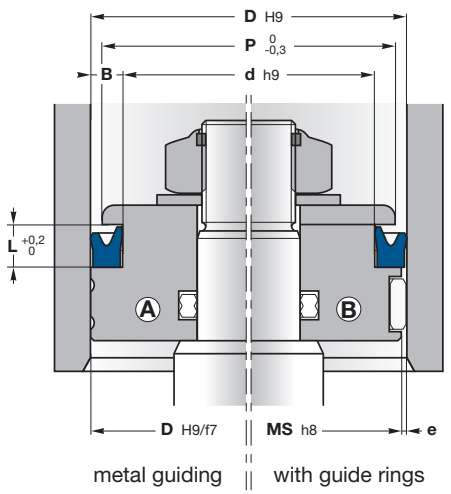

P = d + 1,4 B

MS = D - 2e

Machining of housings: see pages 48-49

Pressure (MPa)	e (mm) 10RSE	
	D ≤ 60 mm	**D** > 60 mm
5	≤ 0,4	≤ 0,5
10	≤ 0,3	≤ 0,4
20	≤ 0,2	≤ 0,3
30	≤ 0,15	≤ 0,2
40	≤ 0,1	≤ 0,15

10RSE is designed with a shorter and stronger outer sealing lip to concentrate the load against the dynamic surface.

The sealing lip on the static side is longer to provide a wide contact area and more flexible, therefore more sensitive to pressure fluctuations.

Operating conditions	see page 8
Pressure	≤ 40 MPa
Temperature	-30°C to 100°C
Speed	≤ 0,5 m/s
Fluids	see pages 22-45

Materials	see pages 10-19
Seal	PU09 or PU10

Assembly	see pages 54-59
On one-piece pistons Ⓐ	
On two-piece pistons Ⓑ	

Advantages

- Excellent abrasion resistance
- Efficient sealing
- Simple groove design

Please contact us for applications approaching maximum values.

More information

On **www.all-tec-business.net**, click first on the reference and then on the material code to obtain the data sheet of the material.

For special requirements (fluid, temperature, pressure, speed...) or applications approaching maximum values, please contact us. Other materials available: **FPM**, **HNBR**, **TNBR**, **EPDM**...

D	d	L	Reference
14	8	6,8	**10RSE 1408**
16	10	6,5	**10RSE 1610/1**
	10	9	**10RSE 1610**
20	12	5,8	**10RSE 2012/1**
	12	7,5	**10RSE 2012**
22	12	9	**10RSE 2212**
25	10	11	**10RSE 2510**
	15	9	**10RSE 2515**
30	15	11	**10RSE 3015**
	20	9	**10RSE 3020**
	22	7	**10RSE 3022**
32	22	9	**10RSE 3222/1**
	22	11	**10RSE 3222**
	26	6	**10RSE 3226**
34	22	10	**10RSE 3422**
	28	4	**10RSE 3428**
35	20	11	**10RSE 3520**
	22	11	**10RSE 3522/1**
	25	9	**10RSE 3525**
	27	11	**10RSE 3527**
37	21	13	**10RSE 3721**
38	31	5,2	**10RSE 3831**
40	25	11	**10RSE 4025**
	30	7,5	**10RSE 4030/1**
	30	11	**10RSE 4030**
	32	6,5	**10RSE 4032/2**
	32	9	**10RSE 4032**
	33	9	**10RSE 4033**
42	32	11	**10RSE 4232**
44	20	12	**10RSE 4420**
	25	12	**10RSE 4425**
44,45	34,92	8,7	**10RSE 4434**
45	30	11	**10RSE 4530**
50	30	13	**10RSE 5030**
	32	11	**10RSE 5032**
	35	9,5	**10RSE 5035/1**
	35	11	**10RSE 5035**
	40	5,5	**10RSE 5040/1**
	40	6	**10RSE 5040/1**
	40	8	**10RSE 5040/4**

D	d	L	Reference
50	40	9	**10RSE 5040/3**
	40	11	**10RSE 5040**
	42	6	**10RSE 5042/2**
	42	9	**10RSE 5042/1**
	42	11	**10RSE 5042**
52	42	6,3	**10RSE 5242/2**
	42	10,6	**10RSE 5242**
55	40	11	**10RSE 5540**
60	40	13	**10RSE 6040**
	40	14,5	**10RSE 6040/1**
	45	11	**10RSE 6045**
	50	5,5	**10RSE 6050/1**
	50	7	**10RSE 6050/3**
	50	8	**10RSE 6050**
	50	11	**10RSE 6050/2**
63	43	13	**10RSE 6343**
	45	11	**10RSE 6345**
	45	13	**10RSE 6345/2**
	48	9,5	**10RSE 6348/3**
	48	11	**10RSE 6348/1**
	48	13	**10RSE 6348**
	53	8	**10RSE 6353**
	53	13	**10RSE 6353/1**
65	45	13	**10RSE 6545/1**
	45	14,5	**10RSE 6545**
	50	11	**10RSE 6550**
	55	11	**10RSE 6555/1**
70	50	13	**10RSE 7050**
	50	14,5	**10RSE 7050/1**
	50	16	**10RSE 7050/2**
	55	10,5	**10RSE 7055/1**
	55	13	**10RSE 7055**
	60	7	**10RSE 7060/3**
	60	8	**10RSE 7060**
	60	13	**10RSE 7060/1**
	60	14,5	**10RSE 7060/2**
	62	8,5	**10RSE 7062**
75	50	15	**10RSE 7550**
	55	14,5	**10RSE 7555**
	65	5,5	**10RSE 7565/1**
	65	7,5	**10RSE 7565/3**
	65	8	**10RSE 7565/4**
	65	11	**10RSE 7565/2**
80	60	13	**10RSE 8060**
	60	14,5	**10RSE 8060/1**
	65	13	**10RSE 8065**
	68	9,5	**10RSE 8068**
	70	8	**10RSE 8070**
	70	13	**10RSE 8070/1**
	72	13	**10RSE 8072**

For prices and availability: **www.all-tec-business.net**

PU single acting piston seal with asymmetrical lips

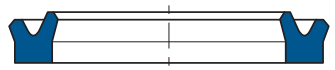

10RSE

10RSE.../M

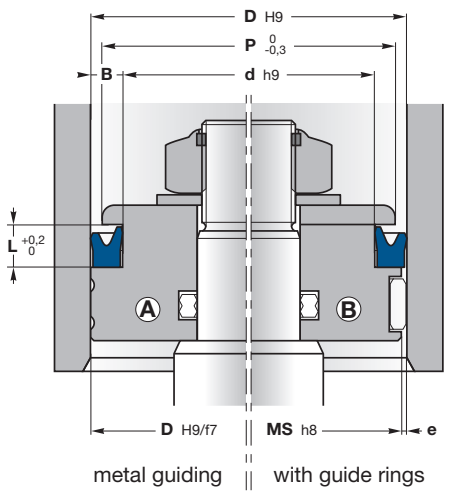

P = d + 1,4 B

MS = D - 2e

Machining of housings: see pages 48-49

Pressure (MPa)	e (mm) 10RSE	
	D ≤ 60 mm	**D** > 60 mm
5	≤ 0,4	≤ 0,5
10	≤ 0,3	≤ 0,4
20	≤ 0,2	≤ 0,3
30	≤ 0,15	≤ 0,2
40	≤ 0,1	≤ 0,15

10RSE is designed with a shorter and stronger outer sealing lip to concentrate the load against the dynamic surface.

The sealing lip on the static side is longer to provide a wide contact area and more flexible, therefore more sensitive to pressure fluctuations.

Operating conditions	see page 8
Pressure	≤ 40 MPa
Temperature	-30°C to 100°C
Speed	≤ 0,5 m/s
Fluids	see pages 22-45

Materials	see pages 10-19
Seal	PU09 or PU10

Assembly	see pages 54-59
On one-piece pistons Ⓐ	
On two-piece pistons Ⓑ	

Advantages

- Excellent abrasion resistance
- Efficient sealing
- Simple groove design

Please contact us for applications approaching maximum values.

More information

On **www.all-tec-business.net**, click first on the reference and then on the material code to obtain the data sheet of the material.

D	d	L	Reference
85	65	13	**10RSE 8565/2**
	65	14,5	**10RSE 8565**
	70	13	**10RSE 8570**
	75	11	**10RSE 8575/1**
	75	13	**10RSE 8575**
90	70	13	**10RSE 9070**
	70	14,5	**10RSE 9070/1**
	75	11	**10RSE 9075/1**
	75	13	**10RSE 9075**
	80	5,5	**10RSE 9080/2**
	80	11	**10RSE 9080/1**
95	80	13	**10RSE 9580**
	85	7,5	**10RSE 9585/2**
	85	8	**10RSE 9585**
	85	9,5	**10RSE 9585/1**
	85	14,5	**10RSE 9585/3**
100	80	11	**10RSE 10080/2**
	80	13	**10RSE 10080**
	80	14,5	**10RSE 10080/1**
	85	10	**10RSE 10085/1**
	85	13	**10RSE 10085**
	88	9,5	**10RSE 10088**
	90	8	**10RSE 10090**
105	90	13	**10RSE 10590**
110	90	13	**10RSE 11090**
	95	13	**10RSE 11095**
	100	8	**10RSE 110100**

D	d	L	Reference
115	100	11,5	**10RSE 115100**
	100	13	**10RSE 115100/2**
120	100	13	**10RSE 120100**
	103	17	**10RSE 120103**
	105	13	**10RSE 120105**
125	100	16	**10RSE 125100/1**
	105	13	**10RSE 125105**
	105	16	**10RSE 125105/1**
	110	11	**10RSE 125110**
130	110	13	**10RSE 130110**
	110	16	**10RSE 130110/1**
140	120	13	**10RSE 140120**
150	125	14,5	**10RSE 150125**
	130	16	**10RSE 150130**
160	140	14,5	**10RSE 160140**
170	150	16	**10RSE 170150**
180	160	14,5	**10RSE 180160**
	160	16	**10RSE 180160/M**
200	175	17	**10RSE 200175**
220	200	16	**10RSE 220200/M**
250	220	19	**10RSE 250220/M**
280	250	19	**10RSE 280250**

For special requirements (fluid, temperature, pressure, speed...) or applications approaching maximum values, please contact us. Other materials available: **FPM**, **HNBR**, **TNBR**, **EPDM**...

For prices and availability: **www.all-tec-business.net**

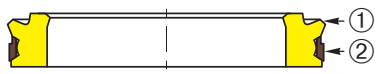

12TDA

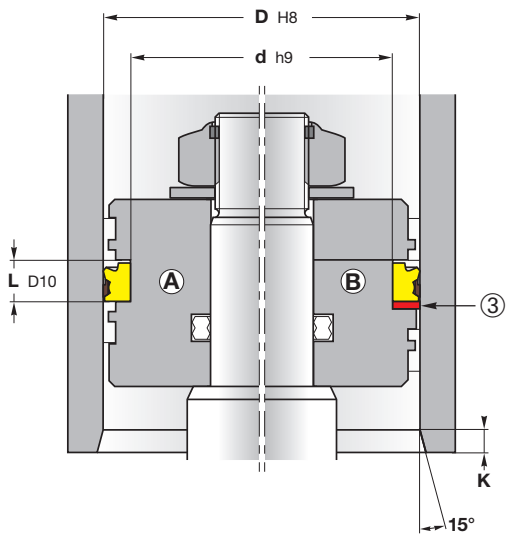

Machining of housings: see pages 48-49

Hunger® **12TDA** tandem seal for outside sealing is used to seal pistons, plungers and accumulators. It can be applied with mineral oils and in modified form also with water base fluids, fire resistant fluids, and compressed air.

12TDA seal consists of 2 parts, an elastic ring of PU with a sealing lip and a slide ring of abrasion resistant PTFE-Bronze-compound with a sealing edge.

Prior to fitting, the sealing lip protrudes beyond the nominal diameter of the seal and is pressed against the cylinder wall after fitting. Thus **effective sealing** is provided even at zero pressure.

Operating conditions	**see page 8**
Pressure	
Construction Ⓐ	≤ 36 MPa
Construction Ⓑ	≤ 63 MPa
Temperature	-35°C to 100°C
Speed	≤ 1 m/s
Fluids	**see pages 22-45**

Materials	**see pages 10-19**
Seal ①	PU
Dynamic sealing element ②	PTFE bronze compound
Anti-extrusion ring ③	POM or PA

Assembly	**see pages 54-59**
On one Ⓐ or two-piece Ⓑ pistons	

Advantages

- Efficient sealing even at low pressures
- Compact seal
- Easy to assemble
- Excellent abrasion resistance
- Minimum friction level
- Long service life

Please contact us for applications approaching maximum values.

More information

On **www.all-tec-business.net**, click first on the reference and then on the material code to obtain the data sheet of the different materials.

D	d	L	K	HUNGER reference	Reference
50	42	7,5	6	010108	**12TDA 50**
63	48	13	6	010112	**12TDA 63**
70	55	13	6	010114	**12TDA 70**
80	65	13	6	010117	**12TDA 80**
90	75	13	7	010120	**12TDA 90**
100	85	13	7	010122	**12TDA 100**
110	95	13	7	010124	**12TDA 110**
125	110	13	7	010127	**12TDA 125**
140	120	13	7	010130	**12TDA 140**
160	140	13	10	010134	**12TDA 160**
180	160	17	10	010137	**12TDA 180**
200	180	17	10	010140	**12TDA 200**
220	200	17	10	010142	**12TDA 220**
250	230	17	10	010147	**12TDA 250**

Further dimensions on request

12TDA seals with diameters between 20 and 1500 mm can be manufactured within short delivery time.
For prices and availability: **www.all-tec-business.net**

For special requirements (fluid, temperature, pressure, speed...) or applications approaching maximum values, please contact us. Other materials available: **FPM**, **HNBR**, **TNBR**, **EPDM**...

PU single acting piston seal with asymmetrical lips

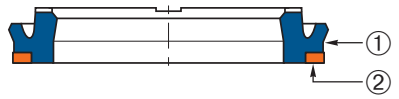

10RSE.../AE

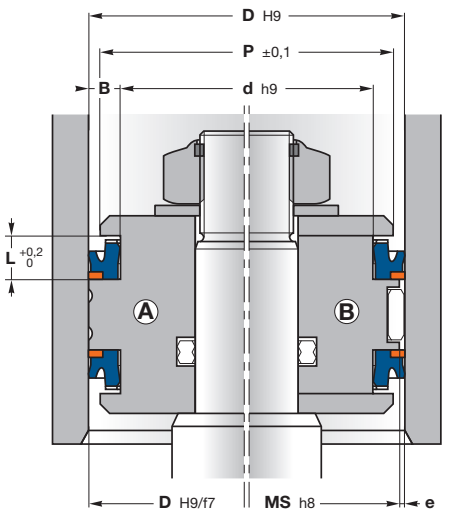

metal guiding || with guide rings

P = d + 1,7 B

Machining of housings: see pages 48-49

Pressure (MPa)	e (mm) 10RSE.../AE	
	D ≤ 60 mm	**D** > 60 mm
5	≤ 0,6	≤ 0,8
10	≤ 0,6	≤ 0,8
20	≤ 0,4	≤ 0,6
30	≤ 0,3	≤ 0,4
40	≤ 0,2	≤ 0,3
50	≤ 0,1	≤ 0,15

10RSE.../AE is designed with a shorter and stronger outer sealing lip to concentrate the load against the dynamic surface.

The sealing lip on the static side is longer to provide a wide contact area and more flexible, therefore more sensitive to pressure fluctuations.

The anti-extrusion ring enable **higher pressure** conditions and greater extrusion gaps.

Operating conditions	see page 8
Pressure	≤ 50 MPa
Temperature	-30°C to 100°C
Speed	≤ 0,5 m/s
Fluids	see pages 22-45

Materials	see pages 10-19
Seal ① / Anti-extrusion ring ②	PU10 / POM24 PU13 / POM24 PU32 / POM84

Assembly	see pages 54-59
On one-piece pistons Ⓐ	
On two-piece pistons Ⓑ	

Advantages

- Excellent abrasion resistance
- Efficient sealing
- Simple groove design
- High extrusion resistance

Please contact us for applications approaching maximum values.

More information

On **www.all-tec-business.net**, click first on the reference and then on the material code to obtain the data sheet of the different materials.

For special requirements (fluid, temperature, pressure, speed...) or applications approaching maximum values, please contact us. Other materials available: **FPM**, **HNBR**, **TNBR**, **EPDM**...

D	d	L	ISO 5597	Reference
40	25	9,5	•	**10RSE 4025/AE**
45	30	9,5	•	**10RSE 4530/AE**
	35	9,5		**10RSE 4535/AE**
50	35	9,5	•	**10RSE 5035/AE**
55	40	9,5		**10RSE 5540/AE**
60	45	9,5	•	**10RSE 6045/AE**
63	48	9,5	•	**10RSE 6348/AE**
65	50	9,5		**10RSE 6550/AE**
70	50	12,5		**10RSE 7050/AE**
	55	9,5	•	**10RSE 7055/AE**
75	55	12,5	•	**10RSE 7555/AE**
80	60	12,5	•	**10RSE 8060/AE**
	65	9,5		**10RSE 8065/AE**
85	70	9,5		**10RSE 8570/AE**
90	70	12,5	•	**10RSE 9070/AE**
	75	9,5		**10RSE 9075/AE**
100	80	12,5	•	**10RSE 10080/AE**
	85	9,5		**10RSE 10085/AE**
105	85	12,5		**10RSE 10585/AE**

D	d	L	ISO 5597	Reference
110	90	12,5	•	**10RSE 11090/AE**
115	95	12,5	•	**10RSE 11595/AE**
120	105	9,5	•	**10RSE 120105/AE**
125	100	16	•	**10RSE 125100/AE**
	105	12,5		**10RSE 125105/AE**
130	110	12,5		**10RSE 130110/AE**
140	115	16	•	**10RSE 140115/AE**
	120	12,5		**10RSE 140120/AE**
150	120	19		**10RSE 150120/AE**
160	130	20	•	**10RSE 160130/AE**
	140	12,5		**10RSE 160140/AE**
170	150	12,5		**10RSE 170150/AE**
180	150	19		**10RSE 180150/AE**
	160	12,5		**10RSE 180160/AE**
190	170	12,5		**10RSE 190170/AE**
200	170	20	•	**10RSE 200170/AE**
	175	15,5		**10RSE 200175/AE**
220	200	15,5		**10RSE 220200/AE**
250	220	19	•	**10RSE 250220/AE**
	225	15,5		**10RSE 250225/AE**

PU single acting piston seal with guide and retaining ring

10RSE.../W

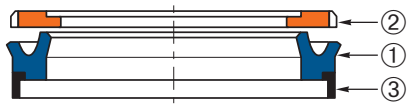

10RSE.../W/AR

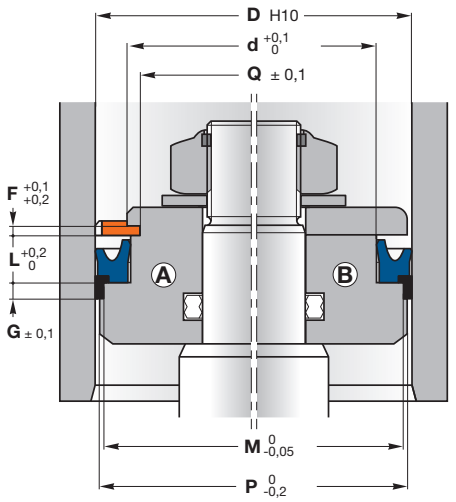

Machining of housings: see pages 48-49

10RSE.../W/AR is made of a sealing element in polyurethane, a guide ring and a circlips in POM.

The sealing part is designed with a shorter and stronger outer sealing lip to concentrate the load against the dynamic surface. The sealing lip on the static side is more flexible and longer to provide a wide contact area, therefore more sensitive to pressure fluctuations.

The POM ring guides the piston in the cylinder tube and supports **radial loads**. The retaining ring helps the assembly in the open groove of the piston seal, especially those with a large radial section

Operating conditions	**see page 8**
Pressure	≤ 40 MPa
Temperature	-40°C to 100°C
Speed	≤ 0,5 m/s
Fluids	**see pages 22-45**

Materials	**see pages 10-19**
Seal ①	PU10
Circlips AR ②	POM24
Guide ring ③	POM/GF1

Assembly	**see pages 54-59**
On one-piece pistons Ⓐ	
On two-piece pistons Ⓑ	

Advantages

- Excellent abrasion resistance
- Efficient sealing
- Guiding and sealing are performed by the seal
- Easy installation

Please contact us for applications approaching maximum values.

More information

On **www.all-tec-business.net**, click first on the reference and then on the material code to obtain the data sheet of the different materials.

For special requirements (fluid, temperature, pressure, speed...) or applications approaching maximum values, please contact us. Other materials available: **FPM**, **HNBR**, **TNBR**, **EPDM**...

D	d	L	G	F	M	P	Q	Reference
32	20	9	6,35		28,5	31		**10RSE 3220/W**
	20	9	6,35	3,1	28,5	31	15,8	**10RSE 3220/W/AR**
35	22	10	6,35	3,1	31,4	34	17,8	**10RSE 3522/W/AR**
40	25	9,5	6,35		35,4	39		**10RSE 4025/W**
	26	9,4	6,35	3,1	35,4	39	21,6	**10RSE 4026/W/AR**
45	30	10	6,35		40,4	44		**10RSE 4530/W**
	30	10	6,35	3,1	40,4	44	25,8	**10RSE 4530/W/AR**
	35	9,5	6,35		40,4	44		**10RSE 4535/W**
50	30	14,5	6,35		44,3	49		**10RSE 5030/W**
	30	14,5	6,35	3,35	44,3	49	25,8	**10RSE 5030/W/AR**
	35	11	6,35		45,35	49		**10RSE 5035/W**
	40	11	6,35		45,4	49		**10RSE 5040/W**
55	40	11	6,35		50,35	54		**10RSE 5540/W**
	40	11	6,35	3,1	50,36	54	35,8	**10RSE 5540/W/AR**
60	40	14,5	6,35		55,4	59		**10RSE 6040/W**
	40	14,5	6,35	3,35	54,2	59	36,1	**10RSE 6040/W1/AR**
	45	11	6,35		55,2	59		**10RSE 6045/W**
	45	11	6,35		54,2	59		**10RSE 6045/W1**
63	45	11	6,35		58,4	62		**10RSE 6345/W**
	45	11	6,35	3,1	58,4	62	40,84	**10RSE 6345/W/AR**
65	50	11	6,35		60,4	64		**10RSE 6550/W**
70	50	14,5	6,35		64,2	69		**10RSE 7050/W**
	50	14,5	6,35	3,35	64,2	69	45,84	**10RSE 7050/W/AR**
80	60	13	6,35		74,15	79		**10RSE 8060/W**
	60	14,5	6,35		74,15	79		**10RSE 8060/W1**
90	70	13	6,35		84,15	89		**10RSE 9070/W**
	70	14,5	6,35		84,15	89		**10RSE 9070/W1**
	70	14,5	6,35	3,35	84,15	89	66,1	**10RSE 9070/W1/AR**
100	80	14,5	6,35		93,15	99		**10RSE 10080/W**
	80	14,5	6,35			99		**10RSE 10080/W1**
110	95	13	6,35		103,1	109		**10RSE 11095/W**
120	100	14,5	6,35		113,1	119		**10RSE 120100/W**
	100	14,5	6,35		114,1	119		**10RSE 120100/W1**
140	120	12,5	6,35		133	139		**10RSE 140120/W**

10RSE.../W and 10RSE.../W/AR seals with diameters between 20 and 1500 mm can be manufactured within short delivery time.
For prices and availability: **www.all-tec-business.net**

PU piston seal with energising ring

10EUS/I

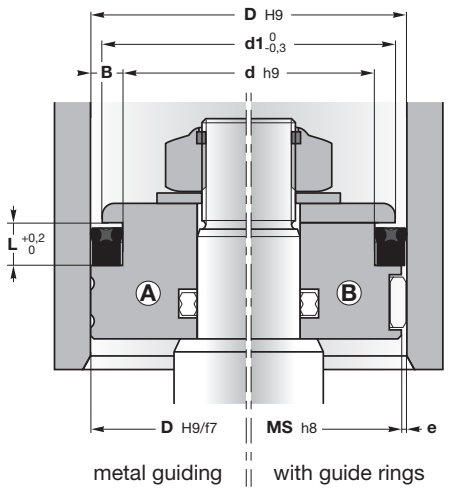

d1 = d + 1,4 B

MS = D - 2e

Machining of housings: see pages 48-49

10EUS/I is the natural further development of the U-ring.

This profile combines the advantage of a highly elastic rubber and the abrasion resistance of polyurethane. The energising ring guarentees good sealing performance also **at low pressure**. This performance will increase with the pressure.

Operating conditions	see page 8
Pressure	≤ 40 MPa
Temperature	-30°C to 100°C
Speed	≤ 0,5 m/s
Fluids	see pages 22-45

Materials	see pages 10-19
Seal ①	PU45
Energising ring ②	NBR

Assembly	see pages 54-59
On one-piece pistons Ⓐ	
On two-piece pistons Ⓑ	

Advantages

- Efficient sealing at high and low pressure
- Excellent abra sion resistance
- Good price-performance ratio
- Easy installation on monobloc pistons
- Good resistance to clearance extrusion
- Very low compression set due to the Quad-Ring®

Please contact us for applications approaching maximum values.

More information

On **www.all-tec-business.net**, click first on the reference and then on the material code to obtain the data sheet of the different materials.

Pressure (MPa)	**e** (mm)	
	D ≤ 60 mm	**D** > 60 mm
5	≤ 0,4	≤ 0,5
10	≤ 0,3	≤ 0,4
20	≤ 0,2	≤ 0,3
30	≤ 0,15	≤ 0,2
40	≤ 0,1	≤ 0,15

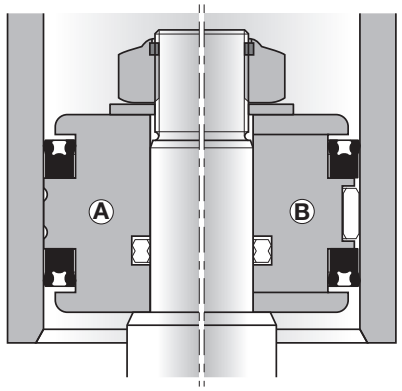

On double acting pistons the seals may be mounted without energising ring to obtain less friction.

For special requirements (fluid, temperature, pressure, speed...) or applications approaching maximum values, please contact us. Other materials available: **FPM**, **HNBR**, **TNBR**, **EPDM**...

D	d	L	Reference
12,7	6,35	3,5	**10EUS/I 025050**
15,88	9,52	3,5	**10EUS/I 037062**
19,05	9,52	5,3	**10EUS/I 037075**
	12,7	3,5	**10EUS/I 050075**
22,22	15,88	3,5	**10EUS/I 062087**
25,4	12,7	7	**10EUS/I 050100/1**
	12,7	10,5	**10EUS/I 050100**
	19,05	3,5	**10EUS/I 075100/2**
	19,05	5,3	**10EUS/I 075100**
	19,05	7	**10EUS/I 075100/1**
26,99	20,63	3,5	**10EUS/I 081106/1**
	20,63	5,3	**10EUS/I 081106**
28,57	19,05	8,7	**10EUS/I 075112**
	22,22	3,5	**10EUS/I 087112/1**
	22,22	7	**10EUS/I 087112**
30,16	23,81	7	**10EUS/I 093118**
31,75	19,05	7	**10EUS/I 075125**
	25,4	3,5	**10EUS/I 100125/1**
	25,4	5,3	**10EUS/I 100125**
34,93	25,4	5,3	**10EUS/I 100137/1**
	25,4	8,7	**10EUS/I 100137**
	28,57	3,5	**10EUS/I 112137**
38,1	25,4	7	**10EUS/I 100150**
	28,57	8,7	**10EUS/I 112150**
	31,75	5,3	**10EUS/I 125150**
	31,75	7	**10EUS/I 125150/1**
39,68	33,33	5,3	**10EUS/I 131156**
41,27	31,75	5,3	**10EUS/I 125162/3**
	31,75	7	**10EUS/I 125162**
	31,75	8,7	**10EUS/I 125162/1**
	31,75	10,5	**10EUS/I 125162/2**
	34,92	5,3	**10EUS/I 137162**
44,45	25,4	10,5	**10EUS/I 100175**
	31,75	7	**10EUS/I 125175**
	31,75	10,5	**10EUS/I 125175/1**
	34,92	7	**10EUS/I 137175/2**
	34,92	8,7	**10EUS/I 137175**
	34,92	10,5	**10EUS/I 137175/1**
47,62	31,75	8,7	**10EUS/I 125187**
	31,75	10,5	**10EUS/I 125187/1**
	34,92	10,5	**10EUS/I 137187**

D	d	L	Reference
47,62	38,1	5,3	**10EUS/I 150187/1**
	38,1	7	**10EUS/I 150187**
	38,1	10,5	**10EUS/I 150187/2**
50,8	31,75	10,5	**10EUS/I 125200**
	38,1	7	**10EUS/I 150200**
	38,1	10,5	**10EUS/I 150200/1**
	41,27	10,5	**10EUS/I 162200**
53,97	44,45	5,3	**10EUS/I 175212/3**
	44,45	7	**10EUS/I 175212**
	44,45	8,7	**10EUS/I 175212/2**
	44,45	10,5	**10EUS/I 175212/1**
57,15	44,45	10,5	**10EUS/I 175225**
	47,62	5,3	**10EUS/I 187225**
	47,62	10,5	**10EUS/I 187225/1**
60,32	44,45	14	**10EUS/I 175237**
	47,62	10,5	**10EUS/I 187237**
	50,8	5,3	**10EUS/I 200237/2**
	50,8	8,7	**10EUS/I 200237**
	50,8	10,5	**10EUS/I 200237/1**
63,5	47,62	10,5	**10EUS/I 187250**
	50,8	7	**10EUS/I 200250/1**
	50,8	10,5	**10EUS/I 200250**
	53,97	7	**10EUS/I 212250**
	53,97	10,5	**10EUS/I 212250/1**
66,67	47,62	10,5	**10EUS/I 187262**
	50,8	10,5	**10EUS/I 200262**
	53,97	10,5	**10EUS/I 212262**
	57,15	5,3	**10EUS/I 225262/2**
	57,15	8,7	**10EUS/I 225262**
	57,15	10,5	**10EUS/I 225262/1**
69,85	53,97	10,5	**10EUS/I 212275**
	57,15	8,7	**10EUS/I 225275/1**
	57,15	10,5	**10EUS/I 225275**
	60,32	5,3	**10EUS/I 237275**
	60,32	10,5	**10EUS/I 237275/1**
73,02	57,15	10,5	**10EUS/I 225287**
	60,32	10,5	**10EUS/I 237287**
	63,5	8,7	**10EUS/I 250287**
	63,5	10,5	**10EUS/I 250287/1**
76,2	63,5	7	**10EUS/I 250300**
	63,5	10,5	**10EUS/I 250300/1**
	66,67	5,3	**10EUS/I 262300**
	66,67	10,5	**10EUS/I 262300/1**
79,37	63,5	14	**10EUS/I 250312**
	66,67	10,5	**10EUS/I 262312**

References 10EUS/I and 10EUS/I.../P are identical seals.

10EUS/I seals with diameters between 20 and 1500 mm can be manufactured within short delivery time.
For prices and availability: **www.all-tec-business.net**

PU piston seal with energising ring

10EUS/I

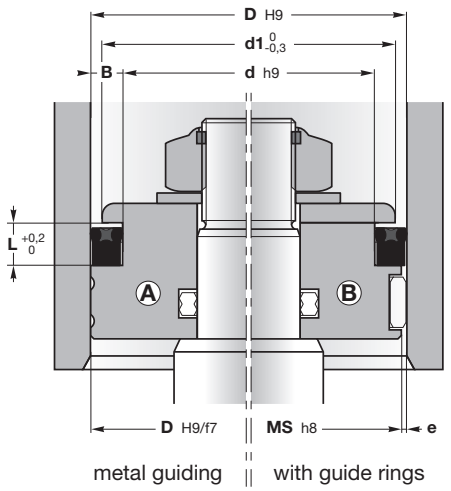

d1 = d + 1,4 B

MS = D - 2e

Machining of housings: see pages 48-49

10EUS/I is the natural further development of the U-ring.

This profile combines the advantage of a highly elastic rubber and the abrasion resistance of polyurethane. The energising ring guarentees good sealing performance also **at low pressure**. This performance will increase with the pressure.

Operating conditions	**see page 8**
Pressure	≤ 40 MPa
Temperature	-30°C to 100°C
Speed	≤ 0,5 m/s
Fluids	**see pages 22-45**

Materials	**see pages 10-19**
Seal ①	PU45
Energising ring ②	NBR

Assembly	**see pages 54-59**
On one-piece pistons Ⓐ	
On two-piece pistons Ⓑ	

Advantages

- Efficient sealing at high and low pressure
- Excellent abra sion resistance
- Good price-performance ratio
- Easy installation on monobloc pistons
- Good resistance to clearance extrusion
- Very low compression set due to the Quad-Ring®

Please contact us for applications approaching maximum values.

More information

On **www.all-tec-business.net**, click first on the reference and then on the material code to obtain the data sheet of the different materials.

Pressure (MPa)	e (mm)	
	D ≤ 60 mm	**D** > 60 mm
5	≤ 0,4	≤ 0,5
10	≤ 0,3	≤ 0,4
20	≤ 0,2	≤ 0,3
30	≤ 0,15	≤ 0,2
40	≤ 0,1	≤ 0,15

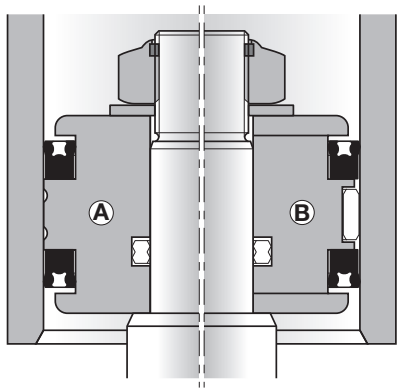

On double acting pistons the seals may be mounted without energising ring to obtain less friction.

For special requirements (fluid, temperature, pressure, speed...) or applications approaching maximum values, please contact us. Other materials available: **FPM**, **HNBR**, **TNBR**, **EPDM**...

D	d	L	Reference
82,55	63,5	10,5	**10EUS/I 250325/1**
	63,5	17,5	**10EUS/I 250325**
	69,85	10,5	**10EUS/I 275325**
85,72	73,02	10,5	**10EUS/I 287337**
	76,2	5,3	**10EUS/I 300337**
	76,2	10,5	**10EUS/I 300337/1**
88,9	69,85	10,5	**10EUS/I 275350**
	69,85	17,5	**10EUS/I 275350/1**
	73,02	14	**10EUS/I 287350**
	76,2	10,5	**10EUS/I 300350**
	79,37	10,5	**10EUS/I 312350**
92,07	76,2	10,5	**10EUS/I 300362**
	76,2	14	**10EUS/I 300362/1**
	79,37	10,5	**10EUS/I 312362**
95,25	76,2	17,5	**10EUS/I 300375**
	79,37	14	**10EUS/I 312375**
	82,55	10,5	**10EUS/I 325375**
	82,55	14	**10EUS/I 325375/1**
98,42	85,72	10,5	**10EUS/I 337387**
	88,9	10,5	**10EUS/I 350387**
101,6	82,55	10,5	**10EUS/I 325400/1**
	82,55	14	**10EUS/I 325400**
	88,9	10,5	**10EUS/I 350400**
104,78	88,9	14	**10EUS/I 350412**
107,95	88,9	10,5	**10EUS/I 350425/1**
	88,9	14	**10EUS/I 350425**
	88,9	17,5	**10EUS/I 350425/2**
	95,25	10,5	**10EUS/I 375425**
	95,25	15,7	**10EUS/I 375425/1**
114,3	88,9	21	**10EUS/I 350450**
	95,25	14	**10EUS/I 375450**
	101,6	10,5	**10EUS/I 400450**
	101,6	15,7	**10EUS/I 400450/1**
117,48	101,6	15,7	**10EUS/I 400462**
120,65	101,6	14	**10EUS/I 400475**
	107,95	10,5	**10EUS/I 425475**
	107,95	15,7	**10EUS/I 425475/1**
127	101,6	21	**10EUS/I 400500**
	107,95	17,5	**10EUS/I 425500**
	111,13	14	**10EUS/I 437500**
	114,3	10,5	**10EUS/I 450500**

D	d	L	Reference
133,35	114,3	17,5	**10EUS/I 450525**
	120,65	10,5	**10EUS/I 475525**
139,7	114,3	21	**10EUS/I 450550**
	127	10,5	**10EUS/I 500550**
146,05	127	17,5	**10EUS/I 500575**
	133,35	10,5	**10EUS/I 525575**
149,1	136,52	7	**10EUS/I 537587**
152,4	127	21	**10EUS/I 500600**
	133,35	17,5	**10EUS/I 525600**
	139,7	10,5	**10EUS/I 550600**
158,75	139,7	17,5	**10EUS/I 550625**
165,1	139,7	21	**10EUS/I 550650**
	152,4	15,7	**10EUS/I 600650**
171,45	152,4	14	**10EUS/I 600675/1**
	152,4	17,5	**10EUS/I 600675**
	158,75	14	**10EUS/I 625675**
177,8	152,4	21	**10EUS/I 600700**
	158,75	10,5	**10EUS/I 625700/1**
	158,75	17,5	**10EUS/I 625700**
	161,92	8,7	**10EUS/I 637700**
	165,1	15,7	**10EUS/I 650700**
184,15	165,1	10,5	**10EUS/I 650725**
	165,1	17,5	**10EUS/I 650725/1**
	171,45	10,5	**10EUS/I 675725**
190,5	165,1	21	**10EUS/I 650750**
	177,8	15,7	**10EUS/I 700750**
196,85	177,8	14	**10EUS/I 700775**
	177,8	17,5	**10EUS/I 700775/1**
203,2	177,8	14	**10EUS/I 700800/1**
	177,8	21	**10EUS/I 700800**
	190,5	15,7	**10EUS/I 750800**
209,55	190,5	14	**10EUS/I 750825**
215,9	203,2	15,7	**10EUS/I 800850**
228,6	203,2	21	**10EUS/I 800900**
	215,9	15,7	**10EUS/I 850900**
241,3	215,9	21	**10EUS/I 850950**

References 10EUS/I and 10EUS/I.../P are identical seals.

10EUS/I seals with diameters between 20 and 1500 mm can be manufactured within short delivery time.
For prices and availability: **www.all-tec-business.net**

PTFE single acting piston seal with energising ring

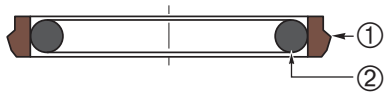

10E/GR...B

Example of item code

10E/GR 0800 B - 55/4470

All-Tec code | Diameter **D** (mm x 10) | Profile | Material ①/②

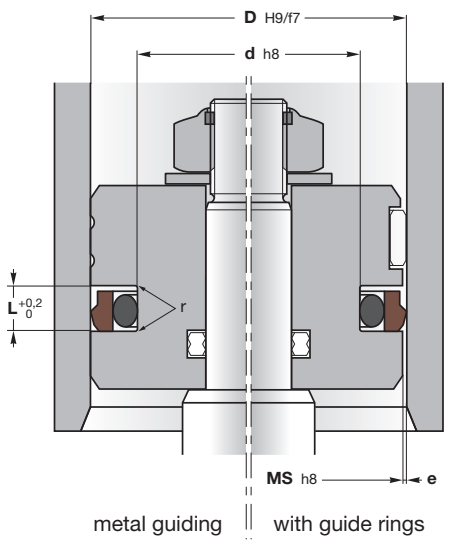

MS = D - 2e

Machining of housings: see pages 48-49

10E/GR...B is a single acting piston seal consisting of a seal ring in PTFE which assures low friction and high speed performance.

The O-ring works as an energising ring and maintains the pressure of the sealing lip against the sliding surface. PTFE has also an excellent chemical resistance, which enables by **changing the O-ring material** (except mineral oils) the use with different type of oils.

Operating conditions	see page 8
Pressure	≤ 50 MPa
Temperature	-30°C to 100°C
Speed	≤ 15 m/s
Fluids	see pages 22-45

Materials	see pages 10-19
Dynamic sealing element ①	PT55
Energising element ②	NBR 70 Sh A

Assembly	see pages 54-59
On one-piece pistons	

Advantages

- High speed performance
- Small sections
- High extrusion resistance and long service life
- Low break-out and running friction
- Compatibility with nearly all media due to the high chemical resistance of the sealing element and the wide selection of O-ring compounds
- Large temperature range using the right O-ring

Please contact us for applications approaching maximum values.

More information

On **www.all-tec-business.net**, click first on the reference and then on the material code to obtain the data sheet of the different materials.

D (mm) 10E/GR Standard serie	D (mm) 10E/GR-L Light serie	D (mm) 10E/GR-P Heavy serie	L (mm)	d (mm)	e (mm) 0-20 MPa	e (mm) 20-40 MPa	e (mm) 40-50 MPa	O-ring ②
8 → 16,9	17 → 26,9		2,2	**D** - 4,9	≤ 0,25	≤ 0,15	f8/H8	1,78
17 → 26,9	27 → 59,9		3,2	**D** - 7,3	≤ 0,3	≤ 0,2		2,62
27 → 59,9	60 → 199,9	17 → 26,9	4,2	**D** - 10,7	≤ 0,3	≤ 0,2		3,53
60 → 199,9	200 → 255,9	27 → 69,9	6,3	**D** - 15,1	≤ 0,4	≤ 0,25		5,33
200 → 255,9	256 → 669,9	60 → 199,9	8,1	**D** - 20,5	≤ 0,4	≤ 0,25		6,99
256 → 669,9	670 → 999,9	200 → 255,9	8,1	**D** - 24	≤ 0,4	≤ 0,25		6,99
670 → 999,9	≥ 1000	256 → 669,9	9,5	**D** - 27,3				8,4
≥ 1000		670 → 999,9	13,8	**D** - 38				12

For special requirements (fluid, temperature, pressure, speed...) or applications approaching maximum values, please contact us. Other materials available: **FPM**, **HNBR**, **TNBR**, **EPDM**...

10E/GR-L: Light serie **10E/GR-P**: Heavy serie

D	d	L	r	O-ring NBR 70 Sh A	Reference
14	9,1	2,2	0,4	8,73 x 1,78	**10E/GR 0140B-55/4470**
16	11,1	2,2	0,4	10,82 x 1,78	**10E/GR 0160B-55/4470**
18	10,7	3,2	0,6	9,9 x 2,62	**10E/GR 0180B-55/4470**
20	15,1	2,2	0,4	14 x 1,78	**10E/GR-L 0200B-55/4470**
25	17,7	3,2	0,6	17,12 x 2,62	**10E/GR 0250B-55/4470**
30	19,3	4,2	1	18,66 x 3,53	**10E/GR 0300B-55/4470**
32	21,3	4,2	1	20,22 x 3,53	**10E/GR 0320B-55/4470**
35	24,3	4,2	1	23,4 x 3,53	**10E/GR 0350B-55/4470**
40	29,3	4,2	1	28,17 x 3,53	**10E/GR 0400B-55/4470**
40	32,7	3,2	0,6	31,42 x 2,62	**10E/GR-L 0400B-55/4470**
45	34,3	4,2	1	32,92 x 3,53	**10E/GR 0450B-55/4470**
50	39,3	4,2	1	37,7 x 3,53	**10E/GR 0500B-55/4470**
55	44,3	4,2	1	44,04 x 3,53	**10E/GR 0550B-55/4470**
60	44,9	6,3	1,3	43,82 x 5,34	**10E/GR 0600B-55/4470**
60	49,3	4,2	1	47,62 x 3,53	**10E/GR-L 0600B-55/4470**
63	47,9	6,3	1,3	46,99 x 5,34	**10E/GR 0630B-55/4470**
63	52,3	4,2	1	50,8 x 3,53	**10E/GR-L 0630B-55/4470**
65	49,9	6,3	1,3	4699 x 5,34	**10E/GR 0650B-55/4470**
70	54,9	6,3	1,3	53,34 x 5,34	**10E/GR 0700B-55/4470**
70	59,3	4,2		56,74 x 3,53	**10E/GR-L 0700B-55/4470**
75	59,9	6,3	1,3	56,52 x 5,34	**10E/GR 0750B-55/4470**
80	64,9	6,3	1,3	62,87 x 5,34	**10E/GR 0800B-55/4470**
85	69,9	6,3	1,3	69,22 x 5,34	**10E/GR 0850B-55/4470**
90	74,9	6,3	1,3	72,39 x 5,34	**10E/GR 0900B-55/4470**
95	79,9	6,3	1,3	78,74 x 5,34	**10E/GR 0950B-55/4470**
100	84,9	6,3	1,3	81,92 x 5,34	**10E/GR 1000B-55/4470**
105	89,9	6,3	1,3	88,27 x 5,34	**10E/GR 1050B-55/4470**
110	94,9	6,3	1,3	91,44 x 5,34	**10E/GR 1100B-55/4470**
115	99,9	6,3	1,3	97,79 x 5,34	**10E/GR 1150B-55/4470**
120	104,9	6,3	1,3	104,14 x 5,34	**10E/GR 1200B-55/4470**
125	109,9	6,3	1,3	107,32 x 5,34	**10E/GR 1250B-55/4470**
130	114,9	6,3	1,3	113,67 x 5,34	**10E/GR 1300B-55/4470**
140	119,5	8,1	1,8	116,84 x 7	**10E/GR-P 1400B-55/4470**
140	124,9	6,3	1,3	123,19 x 5,34	**10E/GR 1400B-55/4470**
150	129,5	8,1	1,8	126,37 x 7	**10E/GR-P 1500B-55/4470**
160	144,9	6,3	1,3	142,24 x 5,34	**10E/GR 1600B-55/4470**
160	139,5	8,1	1,8	135,89 x 7	**10E/GR-P 1600B-55/4470**
170	149,5	8,1	1,8	148,59 x 7	**10E/GR-P 1700B-55/4470**
180	164,9	6,3	1,3	164,47 x 5,34	**10E/GR 1800B-55/4470**
180	159,5	8,1	1,8	158,12 x 7	**10E/GR-P 1800B-55/4470**
200	179,5	8,1	1,8	177,17 x 7	**10E/GR 2000B-55/4470**
220	199,5	8,1	1,8	196,22 x 7	**10E/GR 2200B-55/4470**
250	229,5	8,1	1,8	227,97 x 7	**10E/GR 2500B-55/4470**

10E/GR...B seals with diameters between 20 and 1500 mm can be manufactured within short delivery time.
For prices and availability: **www.all-tec-business.net**

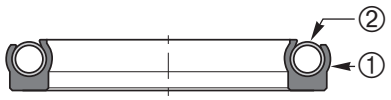

10VOP

Example of item code

10 VOP3 - 0400 - PT02 - SS

All-Tec code | Profile serie | Diameter **d** (mm x 10) | Material ① | Material ②

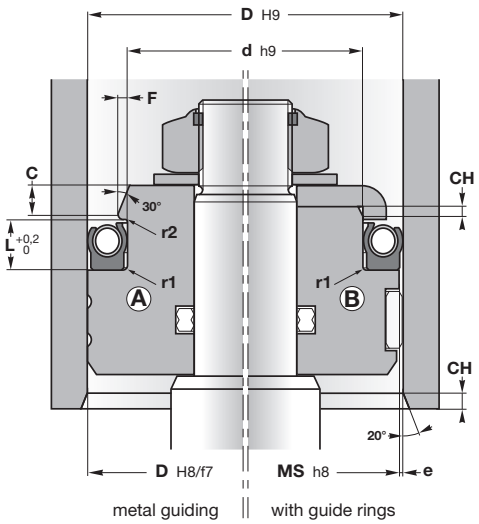

MS = D - 2e

Machining of housings: see pages 48-49

Please contact us for applications approaching maximum values.

10VOP is a single acting seal consisting of a U-shaped seal jacket and an helicoil corrosion resistant spring.

10VOP has an asymmetric seal profile. The heavy profile of its dynamic lip with an optimised front angle offers good leakage control, reduced friction and long service life. At low and zero pressure, the **metal spring provides** the primary sealing force.

As the system pressure increases, the main sealing force is achieved by the system pressure and ensures a tight seal from zero to high pressure. The possibility of **matching suitable materials for the seal and the spring** allows use in a wide range of applications beyond the field of hydraulics, e.g. in the chemical, pharmaceutical and foodstuffs industry.

Operating conditions — **see page 8**

Pressure	
PT02	≤ 20 MPa
PT01 **on demand**	≤ 20 MPa
PT15 **on demand**	≤ 40 MPa
Temperature	-70°C to 260°C
Speed	≤ 15 m/s
Fluids	**see pages 22-45**

Materials — **see pages 10-19**

Seal ①	PT02
	On demand: PT01, PT15
Spring ②	AISI 316-1.4401 = SS
	On demand: Elgiloy® (Cr-Co alloy)
	Hastelloy® (Ni-Mo-Cr alloy)

Assembly — **see pages 54-59**

On one-piece pistons Ⓐ

On two-piece pistons Ⓑ

Advantage

Resistant to the most fluids
Low coefficient of friction
High abrasion resistance
No stick-slip: precision of operating control
Small section
Very high temperature range
PT01 and PT02 are FDA compliant

Serie	d (mm)	L (mm)	F (mm)	r1 (mm)	r2 (mm)	A (mm)	B (mm)	C (mm)	e (mm)			
									2 MPa	10 MPa	20 MPa	40 MPa
V0P1	**D** - 2,9	2,4	0,4	0,25	0,15	0,3	1,2	0,7	≤ 0,2	≤ 0,1	≤ 0,08	≤ 0,05
V0P2	**D** - 4,5	3,6	0,6	0,4	0,15	0,4	1,5	1,1	≤ 0,25	≤ 0,15	≤ 0,1	≤ 0,07
V0P3	**D** - 6,2	4,8	0,7	0,4	0,2	0,4	2,5	1,3	≤ 0,35	≤ 0,2	≤ 0,15	≤ 0,08
V0P4	**D** - 9,4	7,1	0,8	0,4	0,25	0,6	4,5	1,4	≤ 0,5	≤ 0,25	≤ 0,2	≤ 0,1
V0P5	**D** - 12,2	9,5	0,9	0,5	0,25	0,6	6	1,6	≤ 0,6	≤ 0,3	≤ 0,25	≤ 0,12
V0P6	**D** - 19	13,5	1,5	0,5	0,4	0,9	11	2,6	≤ 0,9	≤ 0,5	≤ 0,4	≤ 0,2

For special requirements (fluid, temperature, pressure, speed...) or applications approaching maximum values, please contact us.

D	d	L	Reference
25	18,8	4,8	**10VOP3-0250-PT02-SS**
32	25,8	4,8	**10VOP3-0320-PT02-SS**
40	33,8	4,8	**10VOP3-0400-PT02-SS**
50	40,6	7,1	**10VOP4-0500-PT02-SS**
60	50,6	7,1	**10VOP4-0600-PT02-SS**
63	53,6	7,1	**10VOP4-0630-PT02-SS**
70	60,6	7,1	**10VOP4-0700-PT02-SS**
80	70,6	7,1	**10VOP4-0800-PT02-SS**
100	90,6	7,1	**10VOP4-1000-PT02-SS**
125	112,8	9,5	**10VOP5-1250-PT02-SS**
160	147,8	9,5	**10VOP5-1600-PT02-SS**
200	187,8	9,5	**10VOP5-2000-PT02-SS**

10VOP seals with diameters between 20 and 1500 mm can be manufactured within short delivery time.
For prices and availability: **www.all-tec-business.net**

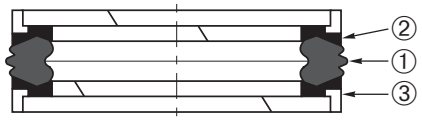

10DBM Profile c

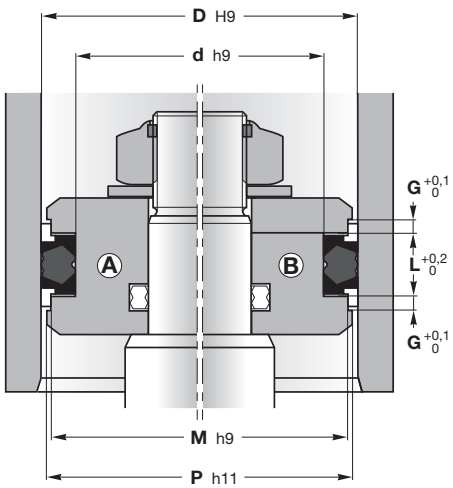

Machining of housings: see pages 48-49

10DBM piston seal is a double acting seal and guide element composed of a sealing rubber element, two anti-extrusion rings and two guide rings.

The NBR ring has a low compression set which assures good sealing performance. The rubber part is designed with three seal edges which concentrate the load against the cylinder tube. The three seal edges also form two cavities which keep small quantities of fluid that **increase the service life**. The design of the static side provides a wide contact area und prevents distorsion inside the groove during installation.

The back-up rings prevent extrusion into the gap and **avoid the rotation** of the rubber part. The function of the guide rings is to guide the piston in the cylinder tube and to support radial load.

Operating conditions	**see page 8**
Pressure	≤ 35 MPa
Temperature	-30°C to 100°C
Speed	≤ 0,5 m/s
Fluids	**see pages 22-45**

Materials	**see pages 10-19**
Seal ①	N8T60
Anti-extrusion rings ②	PR01N
Guide rings ③	PO0WC

Assembly	**see pages 54-59**
On one-piece pistons Ⓐ	
On two-piece pistons Ⓑ	

Advantages

- Efficient sealing at high and low pressure
- Easy installation on monobloc pistons
- Guiding and sealing are performed by the seal
- Good results with drawn tubes
- Simple groove design for one piece pistons

Please contact us for applications approaching maximum values.

More information

On **www.all-tec-business.net**, click first on the reference and then on the material code to obtain the data sheet of the different materials.

Fluorelastomer compound page 486-487: **11DBS...FPM** and **11DBS..FPM/PT**
Inch dimensions page 488-489: **10DBS/I**

D	d	L	G	M	P	Reference TSS	Reference
40	24	18,4	6,35	35,4	38,5	PCB0A0400-N8R0	10DBM 157094
	30	16,4	6,35	35,4	38,5	PCB3A0400-N8R0	10DBM 157118
50	34	18,4	6,35	45,41	48,66	PCB1A0500-N8R0	10DBM 196133
60	44	18,4	6,35	55,39	58,65	PCB1A0600-N8R0	10DBM 236173
63	47	18,4	6,35	58,39	61,63	PCB1A0630-N8R0	10DBM 248185
70	50	22,4	6,35	64,18	68,34	PCB0A0700-N8R0	10DBM 275196
80	60	22,4	6,35	74,16	78,34	PCB0A0800-N8R0	10DBM 314236
90	70	22,4	6,35	84,15	88,31	PCB0A0900-N8R0	10DBM 354275
100	75	22,4	6,35	93,14	98,05	PCB0A1000-N8R0	10DBM 393295
110	85	22,4	6,35	103,1	108	PCB0A1100-N8R0	10DBM 433334
115	90	22,4	6,35	108,1	113,02	PCB0A1150-N8R0	10DBM 452354
120	95	22,4	6,35	113,1	118,02	PCB0A1200-N8R0	10DBM 472374
125	100	25,4	6,35	118,08	122,96	PCB0A1250-N8R0	10DBM 492393
130	105	25,4	9,52	122,6	127,5	PCB1A1300-N8R0	10DBM 511413
140	115	25,4	9,52	132,6	137,5	PCB1A1400-N8R0	10DBM 551452
150	125	25,4	9,52	142,6	147,5	PCB1A1500-N8R0	10DBM 590492
160	135	25,4	9,52	152,6	157,5	PCB1A1600-N8R0	10DBM 629531
	135	25,4	6,35	152,6	157,5	PCB4A1600-N8R0	10DBM 629531/1
180	155	25,4	12,7	171,72	177,1	PCB1A1800-N8R0	10DBM 708610
200	175	25,4	12,7	191,62	197	PCB0A2000-N8R0	10DBM 787688
	175	31,5	6,6	196	199	PCB102000-N8R0	10DBM 787688/M
220	195	25,4	12,7	211,62	217	PCB1A2200-N8R0	10DBM 866767

For special requirements (fluid, temperature, pressure, speed...) or applications approaching maximum values, please contact us. Other materials available: **FPM**, **HNBR**, **TNBR**, **EPDM**...

References printed in turquoise color are **TSS** (**Trelleborg Sealing Solutions**) products.
For prices and availability: **www.all-tec-business.net**

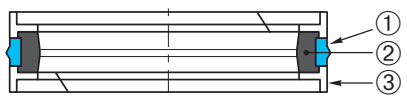

10EUD

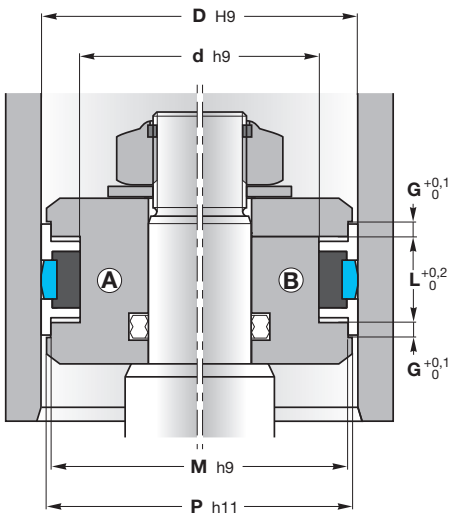

Machining of housings: see pages 48-49

This type of seals are double acting piston seals with **integrated guide rings**. They are characterised by the combination of an elastomer energiser and a polyurethane ring that produces a very effective sealing action and extends the service life. The function of the guide rings is to guide the piston in the cylinder tube and to support radial load.

10EUD is designed with T-shaped back-up and guide rings.

Operating conditions	**see page 8**
Pressure	≤ 40 MPa
Temperature	-30°C to 100°C
Speed	≤ 0,5 m/s
Fluids	**see pages 22-45**

Materials	**see pages 10-19**
Dynamic sealing element ①	Z20
Energising element ②	NBR
Guide rings ③	Acetal resin

Assembly	**see pages 54-59**
On one-piece pistons Ⓐ	
On two-piece pistons Ⓑ	

Advantages

- Efficient sealing at high and low pressure
- Excellent abrasion resistance
- Extended service life
- Easy installation on monobloc pistons
- Small sections

Please contact us for applications approaching maximum values.

More information

On **www.all-tec-business.net**, click first on the reference and then on the material code to obtain the data sheet of the different materials.

For special requirements (fluid, temperature, pressure, speed...) or applications approaching maximum values, please contact us. Other materials available: **FPM**, **HNBR**, **TNBR**, **EPDM**...

D	d	L	G	M	P	Reference TSS	Reference
50	38	20,5	4,2	46	49,4	PCG000500-Z2053	10EUD 5038
60	48	20,5	4,2	56	59,4	PCG000600-Z2053	10EUD 6048
63	51	20,5	4,2	59	62,4	PCG000630-Z2053	10EUD 6351
70	58	20,5	4,2	66	69,4	PCG000700-Z2053	10EUD 7058
80	66	22,5	5,2	76	79,4	PCG000800-Z2053	10EUD 8066
100	86	22,5	5,2	96	99,4	PCG001000-Z2053	10EUD 10086
110	96	22,5	5,2	106	109,4	PCG001100-Z2053	10EUD 11096
120	106	22,5	5,2	116	119,4	PCG001200-Z2053	10EUD 120106
125	108	26,5	7,2	121	124,4	PCG001250-Z2053	10EUD 125108

10EUD seals with diameters between 20 and 1500 mm can be manufactured within short delivery time.
For prices and availability: **www.all-tec-business.net**

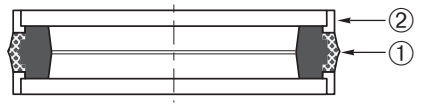

10DPC

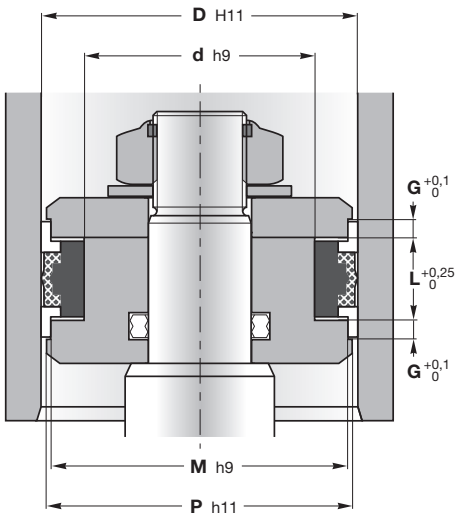

Machining of housings: see pages 48-49

10DPC is a double acting seal and guide element composed of a sealing rubber reinforced element and two guide rings.

The dynamic side of the rubber part is fabric reinforced. Fabric reinforced nitrile elastomer has a higher mechanical strength and **better lubricating properties**.

Operating conditions	**see page 8**
Pressure	≤ 50 MPa
Temperature	-30°C to 120°C
Speed	≤ 0,5 m/s
Fluids	**see pages 22-45**

Materials	**see pages 10-19**
Seal ①	N8T60-C/N8T60
Guide rings ②	PO0WC

Assembly	**see pages 54-59**
On two-piece pistons	

Advantages

- Efficient sealing at high and low pressures
- Low friction
- High pressure
- For heavy duty application

Please contact us for applications approaching maximum values.

More information

On **www.all-tec-business.net**, click first on the reference and then on the material code to obtain the data sheet of the different materials.

For special requirements (fluid, temperature, pressure, speed...) or applications approaching maximum values, please contact us. Other materials available: **FPM**, **HNBR**, **TNBR**, **EPDM**...

D	d	L	G	M	P	Reference TSS	Reference
30	17	15,4	6,35	26,5	29	PCF000300-N000C	10DPC 3017
40	24	18,4	6,35	35,4	38,7	PCF000400-N000C	10DPC 4024
45	29	18,4	6,35	40,4	43,7	PCF000450-N000C	10DPC 4529
50	34	18,4	6,35	45,4	48,7	PCF000500-N000C	10DPC 5034
60	44	18,4	6,35	55,4	58,7	PCF000600-N000C	10DPC 6044
65	50	18,4	6,35	60,4	63,7	PCF000650-N000C	10DPC 6550
70	50	22,4	6,35	64,2	68,3	PCF000700-N000C	10DPC 7050
75	55	22,4	6,35	69,2	73,3	PCF000750-N000C	10DPC 7555
80	60	22,4	6,35	74,2	78,3	PCF000800-N000C	10DPC 8060
85	65	22,4	6,35	79,2	83,3	PCF000850-N000C	10DPC 8565
90	70	22,4	6,35	84,15	88,3	PCF000900-N000C	10DPC 9070
95	75	22,4	6,35	89,15	93,3	PCF000950-N000C	10DPC 9575
100	75	22,4	6,35	93,15	98,05	PCF001000-N000C	10DPC 10075
100	80	25,4	6,35	94,15	98,3	PCF101000-N000C	10DPC 10080
105	85	22,4	6,35	98,1	103	PCF001050-N000C	10DPC 10585
110	85	22,4	6,35	103,1	108	PCF001100-N000C	10DPC 11085
120	100	25,4	6,35	114,1	118,3	PCF001200-N000C	10DPC 120100
130	105	25,4	6,35	123,1	128	PCF001300-N000C	10DPC 130105
140	115	25,4	6,35	133	138	PCF001400-N000C	10DPC 140115
150	125	25,4	6,35	143	148	PCF001500-N000C	10DPC 150125

References printed in turquoise color are **TSS** (**Trelleborg Sealing Solutions**) products.
For prices and availability: **www.all-tec-business.net**

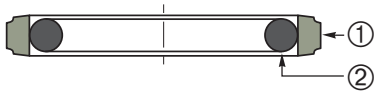

17PT

Example of item code

17 PT03 0 0800 - T46 N

- 17: All-Tec code
- PT03: Profile serie
- 0: Type (standard)
- 0800: Diameter **D** (mm x 10)
- T46: Material ①
- N: Material ②

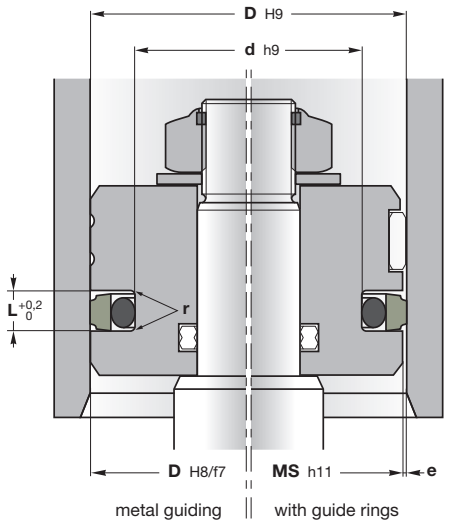

MS = D - 2e

Machining of housings: see pages 48-49

More information

On **www.all-tec-business.net**, click first on the reference and then on the material code to obtain the data sheet of the different materials.

17PT Turcon® **Glyd Ring® T** is a double acting piston seal. Both lateral profile flanks are inclined so that the seal profile tapers towards the seal surface.

The profile can thus retain the robust and compact form typical of piston seals without losing any of the flexibility required to achieve a pressure-related maximum compression. The edge angle created by the special **Glyd Ring® T** crosssectional form permits an additional degree of freedom and enables a slight tilting movement of the seal.

The maximum compression is thus always shifted towards the area of the seal edge directly exposed to the pressure. On the low pressure edge of the seal, the **Glyd Ring® T** exhibts only zones with neutral strains, thus effectively reducing the danger of gap extrusion.

Operating conditions	see page 8
Pressure	≤ 50 MPa
Temperature	-30°C to 100°C
Speed	≤ 15 m/s
Fluids	see pages 22-45
Materials	see pages 10-19
Dynamic sealing element ①	Turcon® T46 **NEW:** Turcon® M12
Energising element ②	NBR 70 Sh A
Assembly	see pages 54-59
On one-piece pistons	
Advantages	
Low running friction	
No Stick-slip	
Long service life	
Small sections	
Compatibility with nearly all media due to the high chemical resistance of the sealing element and the wide selection of O-ring compounds	
Simple groove design	
Large temperature range using the right O-ring	

Please contact us for applications approaching maximum values.

Serie	D (mm) Standard serie	D (mm) Light serie	D (mm) Heavy serie	L (mm)	d (mm)	r (mm)	e (mm) 10 MPa	e (mm) 20 MPa	e (mm) 40MPa	e (mm) 50MPa	O-ring ①
PT00	8→14,9	15→39,9		2,2	**D** - 4,9	0,4	≤ 0,4	≤ 0,3	≤ 0,2	H8/f8	1,78
PT01	15→39,9	40→79,9		3,2	**D** - 7,5	0,6	≤ 0,6	≤ 0,5	≤ 0,3		2,62
PT02	40→79,9	80→132,9	15→39,9	4,2	**D** - 11	1	≤ 0,7	≤ 0,5	≤ 0,3		3,53
PT03	80→132,9	133→329,9	40→79,9	6,3	**D** - 15,5	1,3	≤ 0,8	≤ 0,6	≤ 0,4		5,34
PT04	133→329,9	330→669,9	80→132,9	8,1	**D** - 21	1,8	≤ 0,8	≤ 0,6	≤ 0,4		7
PT08	330→669,9	670→999,9	133→329,9	8,1	**D** - 24,5	1,8	≤ 0,9	≤ 0,7	≤ 0,5		7
PT05	670→999,9		330→669,9	9,5	**D** - 28	2,5	≤ 1	≤ 0,8	≤ 0,6		8,4
PT05X	≥ 1000			13,8	**D** - 28	3	≤ 1,2	≤ 0,9	≤ 0,7		12

For special requirements (fluid, temperature, pressure, speed...) or applications approaching maximum values, please contact us. Other materials available: **FPM**, **HNBR**, **TNBR**, **EPDM**...

D	d	L	r	O-ring NBR 70 Sh A	ISO 3320	Reference
10	5,1	2,2	0,4	4,47 x 1,78		**17PT0000100-T46N**
12	7,1	2,2	0,4	6,70 x 1,8		**17PT0000120-T46N**
13	8,1	2,2	0,4	7,94 x 1,78		**17PT0000130-T46N**
14	9,1	2,2	0,4	8,75 x 1,8		**17PT0000140-T46N**
15	7,5	3,2	0,6	6,98 x 2,62		**17PT0100150-T46N**
16	11,1	2,2	0,4	10,60 x 1,8		**17PT0000160-T46N**
16	8,5	3,2	0,6	7,59 x 2,62	•	**17PT0100160-T46N**
20	12,5	3,2	0,6	12,37 x 2,62	•	**17PT0100200-T46N**
22	14,5	3,2	0,6	13,94 x 2,62		**17PT0100220-T46N**
24	16,5	3,2	0,6	15,54 x 2,62		**17PT0100240-T46N**
25	17,5	3,2	0,6	17,12 x 262	•	**17PT0100250-T46N**
28	20,5	3,2	0,6	20,29 x 2,62		**17PT0100280-T46N**
30	22,5	3,2	0,6	21,89 x 2,62		**17PT0100300-T46N**
32	24,5	3,2	0,6	23,47 x 2,62	•	**17PT0100320-T46N**
35	27,5	3,2	0,6	26,64 x 2,62		**17PT0100350-T46N**
36	28,5	3,2	0,6	28,24 x 2,62		**17PT0100360-T46N**
38	30,5	3,2	0,6	29,82 x 2,62		**17PT0100380-T46N**
40	29	4,2	1	28,17 x 3,53	•	**17PT0200400-T46N**
42	31	4,2	1	29,75 x 3,53		**17PT0200420-T46N**
45	34	4,2	1	32,92 x 3,53		**17PT0200450-T46N**
48	37	4,2	1	36,09 x 3,53		**17PT0200480-T46N**
50	39	4,2	1	37,69 x 3,53	•	**17PT0200500-T46N**
50	34,5	6,3	1,3	32,69 x 5,34	•	**17PT0300500-T46N**
52	41	4,2	1	40,87 x 3,53		**17PT0200520-T46N**
55	44	4,2	1	44,04 x 3,53		**17PT0200550-T46N**
60	49	4,2	1	47,22 x 3,53		**17PT0200600-T46N**
60	44,5	6,3	1,3	43,82 x 5,34		**17PT0300600-T46N**
63	52	4,2	1	50,39 x 3,53	•	**17PT0200630-T46N**
63	47,5	6,3	1,3	46,99 x 5,34	•	**17PT0300630-T46N**
65	54	4,2	1	53,57 x 3,53		**17PT0200650-T46N**
65	49,5	6,3	1,3	46,99 x 5,34		**17PT0300650-T46N**
70	59	4,2	1	56,74 x 3,53		**17PT0200700-T46N**
70	54,5	6,3	1,3	53,34 x 5,34		**17PT0300700-T46N**
75	64	4,2	1	63,09 x 3,53		**17PT0200750-T46N**
80	64,5	6,3	1,3	62,87 x 5,34	•	**17PT0300800-T46N**
80	59	8,1	1,8	58 x 7	•	**17PT0400800-T46N**
85	69,5	6,3	1,3	69,22 x 5,34		**17PT0300850-T46N**
85	64	8,1	1,8	63 x 7		**17PT0400850-T46N**
90	74,5	6,3	1,3	72,39 x 5,34		**17PT0300900-T46N**
90	69	8,1	1,8	68 x 7		**17PT0400900-T46N**
95	79,5	6,3	1,3	78,74 x 5,34		**17PT0300950-T46N**
100	84,5	6,3	1,3	81,92 x 5,34	•	**17PT0301000-T46N**
100	79	8,1	1,8	78 x 7		**17PT0401000-T46N**
105	89,5	6,3	1,3	88,27 x 5,34		**17PT0301050-T46N**
110	94,5	6,3	1,3	91,44 x 5,34		**17PT0301100-T46N**

17PT seals with diameters between 20 and 1500 mm can be manufactured within short delivery time.
For prices and availability: **www.all-tec-business.net**

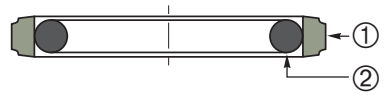

17PT

Example of item code

17 PT03 0 0800 - T46 N

All-Tec code | Profile serie | Type (standard) | Diameter D (mm x 10) | Material ① | Material ②

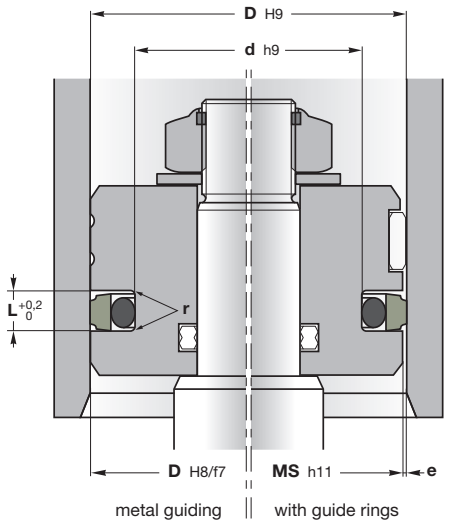

MS = D - 2e

Machining of housings: see pages 48-49

More information

On **www.all-tec-business.net**, click first on the reference and then on the material code to obtain the data sheet of the different materials.

17PT Turcon® **Glyd Ring® T** is a double acting piston seal. Both lateral profile flanks are inclined so that the seal profile tapers towards the seal surface.

The profile can thus retain the robust and compact form typical of piston seals without losing any of the flexibility required to achieve a pressure-related maximum compression. The edge angle created by the special **Glyd Ring® T** crosssectional form permits an additional degree of freedom and enables a slight tilting movement of the seal.

The maximum compression is thus always shifted towards the area of the seal edge directly exposed to the pressure. On the low pressure edge of the seal, the **Glyd Ring® T** exhibts only zones with neutral strains, thus effectively reducing the danger of gap extrusion.

Operating conditions	see page 8
Pressure	≤ 50 MPa
Temperature	-30°C to 100°C
Speed	≤ 15 m/s
Fluids	see pages 22-45
Materials	see pages 10-19
Dynamic sealing element ①	Turcon® T46 **NEW:** Turcon® M12
Energising element ②	NBR 70 Sh A
Assembly	see pages 54-59
On one-piece pistons	
Advantages	
Low running friction	
No Stick-slip	
Long service life	
Small sections	
Compatibility with nearly all media due to the high chemical resistance of the sealing element and the wide selection of O-ring compounds	
Simple groove design	
Large temperature range using the right O-ring	

Please contact us for applications approaching maximum values.

Serie	D (mm) Standard serie	D (mm) Light serie	D (mm) Heavy serie	L (mm)	d (mm)	r (mm)	e (mm) 10 MPa	e (mm) 20 MPa	e (mm) 40MPa	e (mm) 50MPa	O-ring ①
PT00	8→14,9	15→39,9		2,2	**D** - 4,9	0,4	≤ 0,4	≤ 0,3	≤ 0,2	H8/f8	1,78
PT01	15→39,9	40→79,9		3,2	**D** - 7,5	0,6	≤ 0,6	≤ 0,5	≤ 0,3		2,62
PT02	40→79,9	80→132,9	15→39,9	4,2	**D** - 11	1	≤ 0,7	≤ 0,5	≤ 0,3		3,53
PT03	80→132,9	133→329,9	40→79,9	6,3	**D** - 15,5	1,3	≤ 0,8	≤ 0,6	≤ 0,4		5,34
PT04	133→329,9	330→669,9	80→132,9	8,1	**D** - 21	1,8	≤ 0,8	≤ 0,6	≤ 0,4		7
PT08	330→669,9	670→999,9	133→329,9	8,1	**D** - 24,5	1,8	≤ 0,9	≤ 0,7	≤ 0,5		7
PT05	670→999,9		330→669,9	9,5	**D** - 28	2,5	≤ 1	≤ 0,8	≤ 0,6		8,4
PT05X	≥ 1000			13,8	**D** - 28	3	≤ 1,2	≤ 0,9	≤ 0,7		12

For special requirements (fluid, temperature, pressure, speed...) or applications approaching maximum values, please contact us. Other materials available: **FPM**, **HNBR**, **TNBR**, **EPDM**...

D	d	L	r	O-ring NBR 70 Sh A	ISO 3320	Reference
110	89	8,1	1,8	88 x 7		**17PT0401100-T46N**
115	99,5	6,3	1,3	97,79 x 5,34		**17PT0301150-T46N**
120	104,5	6,3	1,3	100,97 x 5,34		**17PT0301200-T46N**
120	99	8,1	1,8	98 x 7		**17PT0401200-T46N**
125	109,5	6,3	1,3	107,32 x 5,34	•	**17PT0301250-T46N**
125	104	8,1	1,8	103 x 7	•	**17PT0401250-T46N**
130	114,5	6,3	1,3	113,67 x 5,34		**17PT0301300-T46N**
130	109	8,1	1,8	108 x 7		**17PT0401300-T46N**
140	124,5	6,3	1,3	123,19 x 5,34		**17PT0301400-T46N**
140	119	8,1	1,8	116,84 x 7		**17PT0401400-T46N**
150	129	8,1	1,8	126,37 x 7		**17PT0401500-T46N**
160	139	8,1	1,8	135,89 x 7	•	**17PT0401600-T46N**
170	149	8,1	1,8	145,42 x 7		**17PT0401700-T46N**
180	164,5	6,3	1,3	164,47 x 5,34		**17PT0301800-T46N**
180	159	8,1	1,8	158,12 x 7		**17PT0401800-T46N**
190	169	8,1	1,8	164,47 x 7		**17PT0401900-T46N**
200	179	8,1	1,8	177,17 x 7	•	**17PT0402000-T46N**
210	189	8,1	1,8	183,52 x 7		**17PT0402100-T46N**
220	199	8,1	1,8	196,22 x 7		**17PT0402200-T46N**
225	204	8,1	1,8	202,57 x 7		**17PT0402250-T46N**
230	209	8,1	1,8	202,57 x 7		**17PT0402300-T46N**
240	219	8,1	1,8	215,27 x 7		**17PT0402400-T46N**
250	229	8,1	1,8	227,97 x 7	•	**17PT0402500-T46N**
260	239	8,1	1,8	240,67 x 7		**17PT0402600-T46N**
270	249	8,1	1,8	240,67 x 7		**17PT0402700-T46N**
280	259	8,1	1,8	253,37 x 7		**17PT0402800-T46N**
290	269	8,1	1,8	266,07 x 7		**17PT0402900-T46N**
300	279	8,1	1,8	278,77 x 7		**17PT0403000-T46N**
320	299	8,1	1,8	291,47 x 7	•	**17PT0403200-T46N**
325	304	8,1	1,8	297,8 x 7		**17PT0403250-T46N**
330	305,5	8,1	1,8	304,17 x 7		**17PT0803300-T46N**
340	319	8,1	1,8	316,87 x 7		**17PT0403400-T46N**
340	315,5	8,1	1,8	316,87 x 7		**17PT0803400-T46N**
350	325,5	8,1	1,8	316,87 x 7		**17PT0803500-T46N**
360	335,5	8,1	1,8	329,57 x 7		**17PT0803600-T46N**
370	345,5	8,1	1,8	342,27 x 7		**17PT0803700-T46N**
380	355,5	8,1	1,8	354,97 x 7		**17PT0803800-T46N**
400	375,5	8,1	1,8	367,67 x 7	•	**17PT0804000-T46N**
410	385,5	8,1	1,8	380,37 x 7		**17PT0804100-T46N**
420	395,5	8,1	1,8	393,07 x 7		**17PT0804200-T46N**
450	425,5	8,1	1,8	417,96 x 7		**17PT0804500-T46N**
500	475,5	8,1	1,8	468,76 x 7	•	**17PT0805000-T46N**

17PT seals with diameters between 20 and 1500 mm can be manufactured within short delivery time.
For prices and availability: **www.all-tec-business.net**

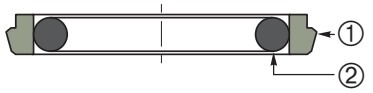

17PSK

Example of item code

17 PSK3 0 0800 - T46 N

- 17: All-Tec code
- PSK3: Profile serie
- 0: Type (standard)
- 0800: Diameter **D** (mm x 10)
- T46: Material ①
- N: Material ②

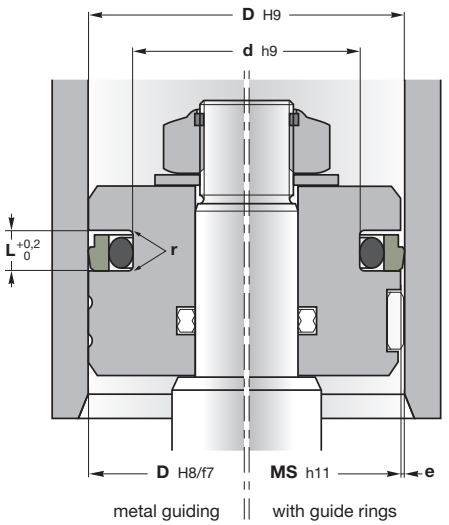

MS = D - 2e

Machining of housings: see pages 48-49

More information

On **www.all-tec-business.net**, click first on the reference and then on the material code to obtain the data sheet of the different materials.

17PSK Stepseal® 2K is a single acting seal element consisting of a seal ring of high-grade Turcon® material and an O-ring as energising element.

Stepseal® 2K was originally developed and patented by Trelleborg Sealing Solutions as a rod seal.

Due to its oustanding properties, however, it is equally well suited as a single acting piston seal where high demands are made on positional accuracy and free movement.

Operating conditions	see page 8
Pressure	Turcon® T46 : ≤ 50 MPa Turcon® T29 : ≤ 30 MPa
Temperature	-30°C to 100°C
Speed	≤ 15 m/s
Fluids	see pages 22-45

Materials	see pages 10-19
Dynamic sealing element ①	Turcon® T46 Turcon® T29 **NEW:** Turcon® M12
Energising element ②	NBR 70 Sh A

Assembly	see pages 54-59
On one-piece pistons	

Advantages

- Low running friction
- No Stick-slip
- Long life
- Small sections
- Compatibility with nearly all media due to the high chemical resistance of the sealing element and the wide selection of O-ring compounds
- Simple groove design
- Large temperature range using the right O-ring

Please contact us for applications approaching maximum values.

Serie	D (mm) Standard serie	D (mm) Light serie	D (mm) Heavy serie	L (mm)	d (mm)	r (mm)	e (mm) 10 MPa	e (mm) 20 MPa	e (mm) 40 MPa	e (mm) 50 MPa	O-ring ①
PSK0	8 → 16,9	17 → 26,9		2,2	**D** - 4,9	0,4	≤ 0,3	≤ 0,2	≤ 0,15	H8/f8	1,78
PSK1	17 → 26,9	27 → 59,9		3,2	**D** - 7,3	0,6	≤ 0,4	≤ 0,25	≤ 0,15		2,62
PSK2	27 → 59,9	60 → 199,9	17 → 26,9	4,2	**D** - 10,7	1	≤ 0,5	≤ 0,3	≤ 0,2		3,53
PSK3	60 → 199,9	200 → 255,9	27 → 59,9	6,3	**D** - 15,1	1,3	≤ 0,7	≤ 0,4	≤ 0,25		5,34
PSK4	200 → 255,9	256 → 669,9	60 → 199,9	8,1	**D** - 20,5	1,8	≤ 0,8	≤ 0,6	≤ 0,35		7
PSK8	256 → 669,9	670 → 999,9	200 → 255,9	8,1	**D** - 24	1,8	≤ 0,9	≤ 0,7	≤ 0,4		7
PSK5	670 → 999,9	≥ 1000	256 → 669,9	9,5	**D** - 27,3	2,5	≤ 1	≤ 0,8	≤ 0,6		8,4
PSK6X	1000 → 2700			13,8	**D** - 38	3	≤ 1,2	≤ 0,9	≤ 0,6		12

For special requirements (fluid, temperature, pressure, speed...) or applications approaching maximum values, please contact us. Other materials available: **FPM**, **HNBR**, **TNBR**, **EPDM**...

D	d	L	r	O-ring NBR 70 Sh A	ISO 3320	Reference
14	9,1	2,2	0,4	8,73 x 1,78		**17PSK000140-T46N**
16	11,1	2,2	0,4	10,82 x 1,78	•	**17PSK000160-T46N**
18	10,7	3,2	0,6	9,9 x 2,62		**17PSK100180-T46N**
20	15,1	2,2	0,4	14 x 1,78	•	**17PSK000200-T46N**
25	17,7	3,2	0,6	17,12 x 2,62	•	**17PSK100250-T46N**
30	19,3	4,2	1	18,66 x 3,53		**17PSK200300-T46N**
32	21,3	4,2	1	20,22 x 3,53	•	**17PSK200320-T46N**
35	24,3	4,2	1	23,4 x 3,53		**17PSK200350-T46N**
40	29,3	4,2	1	28,17 x 3,53	•	**17PSK200400-T46N**
40	32,7	3,2	0,6	31,42 x 2,62	•	**17PSK100400-T46N**
50	39,3	4,2	1	37,7 x 3,53	•	**17PSK200500-T46N**
55	44,3	4,2	1	44,04 x 3,53		**17PSK200550-T46N**
60	44,9	6,3	1,3	43,82 x 5,34		**17PSK300600-T46N**
63	47,9	6,3	1,3	46,99 x 5,34	•	**17PSK300630-T46N**
63	52,3	4,2	1	50,8 x 3,53	•	**17PSK200630-T46N**
70	54,9	6,3	1,3	53,34 x 5,34		**17PSK300700-T46N**
75	59,9	6,3	1,3	56,52 x 5,34		**17PSK300750-T46N**
80	64,9	6,3	1,3	62,87 x 5,34	•	**17PSK300800-T46N**
85	69,9	6,3	1,3	69,22 x 5,34		**17PSK300850-T46N**
90	74,9	6,3	1,3	72,39 x 5,34		**17PSK300900-T46N**
100	84,9	6,3	1,3	81,92 x 5,34	•	**17PSK301000-T46N**
110	94,9	6,3	1,3	91,44 x 5,34		**17PSK301100-T46N**
125	109,9	6,3	1,3	107,32 x 5,34	•	**17PSK401600-T46N**
160	139,5	8,1	1,8	135,89 x 7	•	**17PSK401600-T46N**
180	164,9	6,3	1,3	164,47 x 5,34		**17PSK301800-T29N**
200	184,9	6,3	1,3	183,52 x 5,34	•	**17PSK302000-T46N**
200	179,5	8,1	1,8	177,17 x 7	•	**17PSK402000-T46N**
220	199,5	8,1	1,8	196,22 x 7	•	**17PSK402200-T46N**
260	236	8,1	1,8	227,97 x 7		**17PSK802600-T46N**
300	276	8,1	1,8	266,07 x 7		**17PSK803000-T46N**
310	282,7	9,5	2,5	279,5 x 8,4		**17PSK503100-T29N**
360	336	8,1	1,8	329,57 x 7		**17PSK803600-T46N**
400	376	8,1	1,8	367,67 x 7	•	**17PSK804000-T46N**
420	396	8,1	1,8	393,07 x 7		**17PSK804200-T46N**

17PSK seals with diameters between 20 and 1500 mm can be manufactured within short delivery time.
For prices and availability: **www.all-tec-business.net**

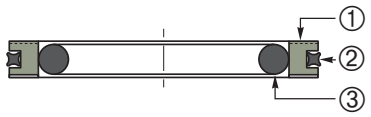

17PQ

Example of item code

17 PQ14 0 0800 - T46 N

All-Tec code | Profile serie | Type (standard) | Diameter D (mm x 10) | Material ① | Material ②/③

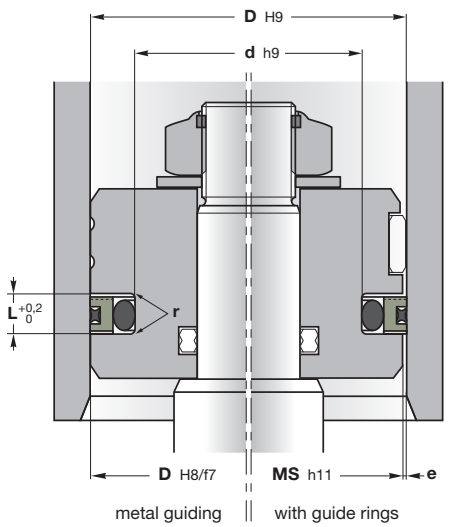

MS = D - 2e

Machining of housings: see pages 48-49

More information

On **www.all-tec-business.net**, click first on the reference and then on the material code to obtain the data sheet of the different materials.

17PQ Turcon® **AQ-Seal®** is a double acting seal consisting of a seal ring of high grade modified Turcon material, a X-ring Seal and an O-ring as energising element.

The Turcon® seal ring and the X-ring Seal together assume the dynamic sealing function whilst the O-ring performs the static sealing function.

The **AQ-Seal®** is supplied as standard with radial notches on both sides. These ensure direct pressurising of the seal under all operating conditions.

The Turcon **AQ-Seal®** is the recommended sealing element for double acting pistons of positioning and holding cylinders.

Operating conditions see page 8

Pressure	with mineral oils: ≤ 40 MPa low lubricating media: ≤ 25 MPa
Temperature	-30°C to 100°C
Speed	≤ 2 m/s
Fluids	see pages 22-45

Materials see pages 10-19

Dynamic sealing element ①	Turcon® T46 **NEW:** Turcon® M12
Dynamic sealing element ②	NBR 70 Sh: Code N
Energising element ③	NBR 70 Sh: Code N

Assembly see pages 54-59

On one-piece pistons

Advantages

- High sealing effect in applications requiring media separation, e.q. fluid/fluid or fluid/gas
- Low running friction
- Excellent abrasion resistance
- Long service life
- Compatibility with nearly all media due to the high chemical resistance of the sealing element and the wide selection of O-ring compounds
- Simple groove design
- Large temperature range using the right O-ring and X-ring

Please contact us for applications approaching maximum values.

Serie		D (mm)		d (mm)	L (mm)	r (mm)	e (mm)			O-ring ③	QR ②
Standard	Light	Standard serie	Light serie				10 MPa	20 MPa	40 MPa		
PQ12	PQ14	15→39,9 40→79,9	40→79,9 80→132,9	D - 11 D - 15,5	4,2 6,3	1 1,3	≤ 0,25 ≤ 0,3	≤ 0,15 ≤ 0,2	≤ 0,1 ≤ 0,15	3,53 5,33	1,78 1,78
PQ22	PQ24	80→132,9 133→252,9	133→252,9	D - 21 D - 24,5	8,1 8,1	1,8 1,8	≤ 0,3 ≤ 0,3	≤ 0,2 ≤ 0,2	≤ 0,15 ≤ 0,15	7 7	2,62 2,62
PQ32 PQ52		253→462,9 463→700		D - 28 D - 35	9,5 11,5	2,5 3	≤ 0,45 ≤ 0,55	≤ 0,3 ≤ 0,4	≤ 0,25 ≤ 0,35	8,4 10	3,53 5,34

For special requirements (fluid, temperature, pressure, speed...) or applications approaching maximum values, please contact us. Other materials available: **FPM**, **HNBR**, **TNBR**, **EPDM**...

D	d	L	r	O-ring ③ NBR 70 Sh A	X-ring ② NBR 70 Sh A	ISO 3320	Reference
16	5	4,2	1	4,34 x 3,53	12,42 x 1,78		**17PQ1200160-T46N**
25	14	4,2	1	13,87 x 3,53	20,35 x 1,78	•	**17PQ1200250-T46N**
30	19	4,2	1	18,66 x 3,53	25,12 x 1,78		**17PQ1200300-T46N**
32	21	4,2	1	20,22 x 3,53	26,70 x 1,78	•	**17PQ1200320-T46N**
35	24	4,2	1	23,4 x 3,53	29,87 x 1,78		**17PQ1200350-T46N**
40	29	4,2	1	28,17 x 3,53	34,65 x 1,78	•	**17PQ1400400-T46N**
45	34	4,2	1	32,92 x 3,53	37,82 x 1,78		**17PQ1400450-T46N**
50	34,5	6,3	1,3	32,69 x 5,34	44,17 x 1,78	•	**17PQ1200500-T46N**
50	39	4,2	1	37,69 x 3,53	44,17 x 1,78	•	**17PQ1400500-T46N**
55	44	4,2	1	44,04 x 3,53	50,52 x 1,78		**17PQ1400550-T46N**
60	44,5	6,3	1,3	43,82 x 5,34	53,7 x 1,78		**17PQ1200600-T46N**
60	49	4,2	1	47,22 x 3,53	53,7 x 1,78		**17PQ1400600-T46N**
63	47,5	6,3	1,3	46,99 x 5,34	56,87 x 1,78	•	**17PQ1200630-T46N**
63	52	4,2	1	50,39 x 3,53	56,87 x 1,78	•	**17PQ1400630-T46N**
65	54	4,2	1	53,57 x 3,53	60,05 x 1,78		**17PQ1400650-T46N**
70	54,5	6,3	1,3	53,34 x 5,34	63,22 x 1,78		**17PQ1200700-T46N**
70	59	4,2	1	56,74 x 3,53	63,22 x 1,78		**17PQ1400700-T46N**
75	64	4,2	1	63,09 x 3,53	69,57 x 1,78		**17PQ1400750-T46N**
80	59	8,1	1,8	58 x 7	71,12 x 2,62		**17PQ2200800-T46N**
80	64,5	6,3	1,3	62,87 x 5,34	72,75 x 1,78	•	**17PQ1400800-T46N**
90	74,5	6,3	1,3	72,39 x 5,34	82,27 x 1,78		**17PQ1400900-T46N**
95	79,5	6,3	1,3	78,74 x 5,34	88,62 x 1,78		**17PQ1400950-T46N**
100	79	8,1	1,8	78 x 7	88,57 x 2,62		**17PQ2201000-T46N**
100	84,5	6,3	1,3	81,92 x 5,34	88,62 x 1,78	•	**17PQ1401000-T46N**
110	89	8,1	1,8	88 x 7	101,27 x 2,62		**17PQ2201100-T46N**
110	94,5	6,3	1,3	91,44 x 5,34	101,32 x 1,78		**17PQ1401100-T46N**
120	99	8,1	1,8	98 x 7	107,62 x 2,62		**17PQ2201200-T46N**
120	104,5	6,3	1,3	100,97 x 5,34	114,02 x 5,34		**17PQ1401200-T46N**
125	104	8,1	1,8	103 x 7	113,97 x 2,62	•	**17PQ2201250-T46N**
125	109,5	6,3	1,3	107,32 x 5,34	114,02 x 1,78	•	**17PQ1401250-T46N**
130	114,5	6,3	1,3	113,67 x 5,34	120,37 x 1,78		**17PQ1401300-T46N**
140	119	8,1	1,8	116,84 x 7	126,67 x 2,62		**17PQ2401400-T46N**
150	129	8,1	1,8	126,37 x 7	139,37 x 2,62		**17PQ2401500-T46N**
160	139	8,1	1,8	135,89 x 7	145,72 x 2,62	•	**17PQ2401600-T46N**
170	149	8,1	1,8	145,42 x 7	158,42 x 2,62		**17PQ2401700-T46N**
180	159	8,1	1,8	158,12 x 7	171,12 x 2,62		**17PQ2401800-T46N**
200	179	8,1	1,8	177,17 x 7	190,17 x 2,62	•	**17PQ2402000-T46N**
220	199	8,1	1,8	196,22 x 7	202,87 x 2,62		**17PQ2402200-T46N**
250	225,5	8,1	1,8	227,97 x 7	234,62 x 2,62	•	**17PQ2202500-T46N**
250	229	8,1	1,8	227,97 x 7	234,62 x 2,62		**17PQ2402500-T46N**
260	232	9,5	2,5	229,5 x 8,4	240,89 x 3,53		**17PQ3202600-T46N**
280	252	9,5	2,5	249,5 x 8,40	266,29 x 3,53		**17PQ3202800-T46N**
300	272	9,5	2,5	269,5 x 8,40	278,99 x 3,53		**17PQ3203000-T46N**
320	292	9,5	2,5	304,5 x 8,40	304,39 x 3,53		**17PQ3203200-T46N**
400	372	9,5	2,5	369,5 x 8,40	380,59 x 3,53		**17PQ3204000-T46N**

17PQ seals with diameters between 20 and 1500 mm can be manufactured within short delivery time.
For prices and availability: **www.all-tec-business.net**

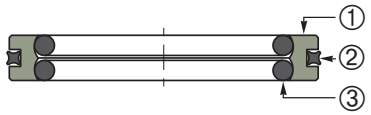

17PQ0

Example of item code

17 PQ02 0 0800 - T46 N

All-Tec code | Profile serie | Type (standard) | Diameter D (mm x 10) | Material ① | Material ②/③

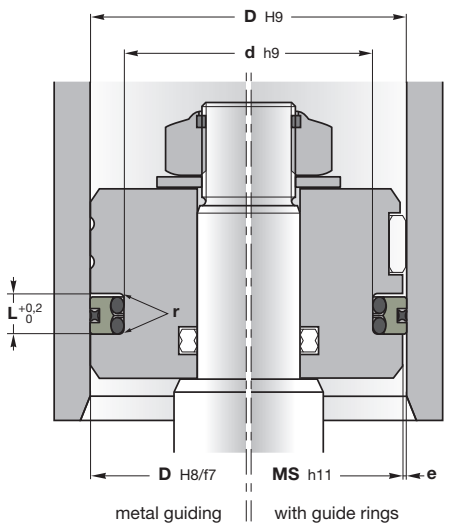

MS = D - 2e

Machining of housings: see pages 48-49

More information

On **www.all-tec-business.net**, click first on the reference and then on the material code to obtain the data sheet of the different materials.

17PQ0 Turcon® **AQ-Seal® 5** is a patended development of the proven standard Turcon® **AQ-Seal®**. Two O-rings are used to energise the seal instead of one.

Turcon® **AQ-Seal® 5** combines the benefits of a low-friction Turcon® slipper seal with the high sealing characteristics of an elastomeric seal by incorporating a X-ring seal in the dynamic sealing face. This optimises leakage control while minimising friction.

The particular characteristics of the **AQ-Seal® 5** are the special seal profile with a defined seal edge and the use of two O-rings as energising elements to optimise the pressure profile and to reduce the force of attack at gas permeability.

Operating conditions	**see page 8**
Pressure	Turcon® T46: ≤ 50 MPa low lubricating media: ≤ 25 MPa
Temperature	-30°C to 100°C
Speed	≤ 3 m/s
Fluids	**see pages 22-45**

Materials	**see pages 10-19**
Dynamic sealing element ①	Turcon® T46 **NEW:** Turcon® M12
Dynamic sealing element	NBR 70 Sh: Code N
Energising element ③	NBR 70 Sh: Code N

Assembly	**see pages 54-59**
On one-piece pistons	

Advantages

- High sealing effect in applications requiring media separation, e.q. fluid/fluid or fluid/gas
- Low running friction
- Excellent abrasion resistance
- Long service life
- Compatibility with nearly all media due to the high chemical resistance of the sealing element and the wide selection of O-ring compounds
- Simple groove design
- Large temperature range using the right O-ring and X-ring

Please contact us for applications approaching maximum values.

Serie	D (mm) Recommended range	D (mm) Extended range	d (mm)	L (mm)	r (mm)	e (mm) 10 MPa	e (mm) 20 MPa	e (mm) 30 MPa	e (mm) 50 MPa	O-ring ③	QR ②
PQ01	40→79,9	25→140	**D** - 10	6,3	0,6	≤ 0,3	≤ 0,2	≤ 0,15	H8/f8	2,62	1,78
PQ02	80→132,9	50→250	**D** - 13	8,3	1	≤ 0,4	≤ 0,3	≤ 0,15		3,53	2,63
PQ03	133→462,9	100→480	**D** - 18	12,3	1,3	≤ 0,4	≤ 0,3	≤ 0,2		5,33	3,53
PQ04	463→700	425→700	**D** - 31	16,3	1,8	≤ 0,5	≤ 0,4	≤ 0,3		7	5,33

For special requirements (fluid, temperature, pressure, speed...) or applications approaching maximum values, please contact us. Other materials available: **FPM**, **HNBR**, **TNBR**, **EPDM**...

D	d	L	r	O-ring ③ 2 pieces NBR 70 Sh A	X-ring ② NBR 70 Sh A	ISO 3320	Reference
32	22	6,3	0,6	21,89 x 2,62	26,7 x1,78	•	**17PQ0100320-T46N**
40	30	6,3	0,6	29,82 x 2,62	34,65 x 1,78	•	**17PQ0100400-T46N**
50	40	6,3	0,6	39,34 x 2,62	44,17 x 1,78	•	**17PQ0100500-T46N**
55	45	6,3	0,6	44,12 x 2,62	50,52 x 1,78		**17PQ0100550-T46N**
60	50	6,3	0,6	48,90 x 2,62	53,70 x 1,78		**17PQ0100600-T46N**
63	53	6,3	0,6	52,07 x 2,62	56,87 x 1,78	•	**17PQ0100630-T46N**
70	60	6,3	0,6	58,42 x 2,62	63,22 x 1,78		**17PQ0100700-T46N**
80	67	8,3	1	66,27 x 3,53	71,12 x 2,62	•	**17PQ0200800-T46N**
90	77	8,3	1	75,79 x 3,53	82,22 x 2,62		**17PQ0200900-T46N**
100	87	8,3	1	85,32 x 3,53	88,57 x 2,62	•	**17PQ0201000-T46N**
110	97	8,3	1	94,84 x 3,53	101,27 x 2,62		**17PQ0201100-T46N**
120	107	8,3	1	104,37 x 3,53	107,62 x 2,62		**17PQ0201200-T46N**
125	112	8,3	1	110,72 x 3,53	113,97 x 2,62	•	**17PQ0201250-T46N**
130	117	8,3	1	113,89 x 3,53	120,32 x 2,62		**17PQ0201300-T46N**
140	122	12,3	1,3	120,02 x 5,34	126,59 x 3,53		**17PQ0301400-T46N**
150	132	12,3	1,3	129,54 x 5,34	136,12 x 3,53		**17PQ0301500-T46N**
160	142	12,3	1,3	139,07 x 5,34	145,64 x 3,53	•	**17PQ0301600-T46N**
170	152	12,3	1,3	148,49 x 5,34	158,34 x 3,53		**17PQ0301700-T46N**
180	162	12,3	1,3	158,12 x 5,34	164,69 x 3,53		**17PQ0301800-T46N**
200	182	12,3	1,3	177,17 x 5,34	183,74 x 3,53	•	**17PQ0302000-T46N**
220	202	12,3	1,3	196,22 x 5,34	202,79 x 3,53		**17PQ0302200-T46N**
230	212	12,3	1,3	208,92 x 5,34	215,49 x 3,53		**17PQ0302300-T46N**
240	222	12,3	1,3	221,62 x 5,34	221,84 x 3,53	•	**17PQ0302400-T46N**
250	232	12,3	1,3	227,97 x 5,34	234,54 x 3,53	•	**17PQ0302500-T46N**
280	262	12,3	1,3	253,37 x 5,34	266,29 x 3,53		**17PQ0302800-T46N**
300	282	12,3	1,3	278,77 x 5,34	278,99 x 3,53		**17PQ0303000-T46N**
320	302	12,3	1,3	291,47 x 5,34	304,39 x 3,53	•	**17PQ0303200-T46N**
360	342	12,3	1,3	329,57 x 5,34	329,79 x 3,53		**17PQ0303600-T46N**
540	509	16,3	1,8	506,86 x 7	506,81 x 5,34		**17PQ0405400-T46N**

17PQ0 seals with diameters between 20 and 1500 mm can be manufactured within short delivery time.
For prices and availability: **www.all-tec-business.net**

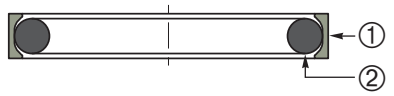

17PDD

Example of item code

17 PDD3 0 0800 - T46 N

All-Tec code | Profile serie | Type (standard) | Diameter D (mm x 10) | Material ① | Material ②

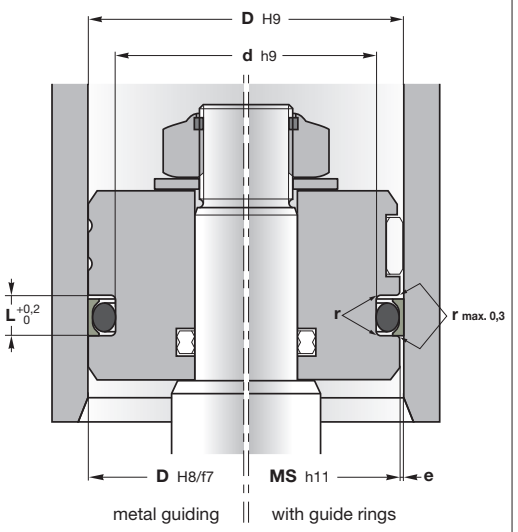

MS = D - 2e

Machining of housings: see pages 48-49

17PDD Turcon® **Double Delta®** is a double acting rubber energised plastic faced seal.

The seal is designed to expand and improve the service parameters of O-rings and is installed in existing O-ring grooves.

Double Delta® combines the flexibility and response of O-rings with the wear and friction characteristics of the Turcon materials in dynamic applications. When the system pressure is increased the O-ring transforms this into additional contact pressure, the contact pressures of the seal is thereby automatically adjusted so sealing is ensured under all service condtions.

Operating conditions	**see page 8**
Pressure	≤ 35 MPa
Temperature	-30°C to 100°C
Speed	≤ 15 m/s
Fluids	**see pages 22-45**

Materials	**see pages 10-19**
Dynamic sealing element ①	Turcon® T46
Energising element ②	NBR 70 Sh: Code N

Assembly	**see pages 54-59**
On one-piece pistons	

Advantage

- Efficient sealing
- Low running friction
- Excellent abrasion resistance
- Long service life
- Compatibility with nearly all media due to the high chemical resistance of the sealing element and the wide selection of O-ring compounds
- Large temperature range using the right O-ring

Please contact us for applications approaching maximum values.

More information

On **www.all-tec-business.net**, click first on the reference and then on the material code to obtain the data sheet of the different materials.

Serie	D (mm) Recommended range	D (mm) Extended range	d (mm)	L (mm)	r (mm)	e (mm) 10 MPa	e (mm) 20 MPa	e (mm) 35 MPa	O-ring ②
PDD0	5→13,9	5→139,9	**D** - 2,9	2,4	0,4	≤ 0,1	≤ 0,08	≤ 0,05	1,78
PDD1	14→24,9	8→259,9	**D** - 4,5	3,6	0,4	≤ 0,15	≤ 0,1	≤ 0,07	2,62
PDD2	25→45,9	12→469,9	**D** - 6,2	4,8	0,6	≤ 0,2	≤ 0,15	≤ 0,08	3,53
PDD3	46→124,9	20→669,9	**D** - 9,4	7,1	0,8	≤ 0,25	≤ 0,2	≤ 0,1	5,34
PDD4	125→669,9	80→999,9	**D** - 12,2	9,5	0,8	≤ 0,3	≤ 0,25	≤ 0,15	7
PDD5	670→999,9	125→999,9	**D** - 15	10	1	≤ 0,4	≤ 0,3	≤ 0,2	8,4

For special requirements (fluid, temperature, pressure, speed...) or applications approaching maximum values, please contact us. Other materials available: **FPM**, **HNBR**, **TNBR**, **EPDM**...

D	d	L	O-ring NBR 70 Sh A	ISO 3320	Reference
16	11,5	3,6	2,62 x 10,77	•	**17PDD100160-T46N**
20	15,5	3,6	2,62 x 13,94	•	**17PDD100200-T46N**
25	18,8	4,8	3,55 x 18	•	**17PDD200250-T46N**
30	23,8	4,8	3,53 x 23,4		**17PDD200300-T46N**
32	25,8	4,8	3,53 x 25	•	**17PDD200320-T46N**
40	33,8	4,8	3,53 x 32,92	•	**17PDD200400-T46N**
50	40,6	7,1	5,30 x 4	•	**17PDD300500-T46N**
60	50,6	7,1	5,34 x 50,17		**17PDD300600-T46N**
63	53,6	7,1	5,34 x 53,34	•	**17PDD300630-T46N**
70	60,6	7,1	5,34 x 59,69		**17PDD300700-T46N**
80	70,6	7,1	5,34 x 69,22	•	**17PDD300800-T46N**
90	80,6	7,1	5,34 x 78,74		**17PDD300900-T46N**
100	90,6	7,1	5,34 x 88,27	•	**17PDD301000-T46N**
110	100,6	7,1	5,34 x 97,79		**17PDD301100-T46N**
125	112,8	9,5	7 x 113,67	•	**17PDD401250-T46N**
140	127,8	9,5	7 x 126,37		**17PDD401400-T46N**
160	147,8	9,5	7 x 145,42	•	**17PDD401600-T46N**
180	167,8	9,5	7 x 164,47	•	**17PDD401800-T46N**
200	187,8	9,5	7 x 183,52	•	**17PDD402000-T46N**

17PDD seals with diameters between 20 and 1500 mm can be manufactured within short delivery time.
For prices and availability: **www.all-tec-business.net**

17PVA

Example of item code

17 PVA2 0 0800 - T40 S

All-Tec code | Profile serie | Type (standard) | Diameter D (mm x 10) | Material ① | Material ②

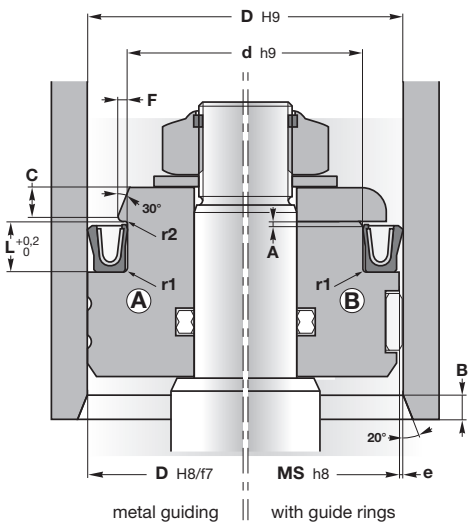

MS = D - 2e

Machining of housings: see pages 48-49

Please contact us for applications approaching maximum values.

17PVA Turcon® **Variseal® M2** is a single acting seal consisting of a U-shaped seal jacket and a V-shaped corrosion resistant spring.

Variseal® M2 has an asymmetric seal profile. The heavy profile of its dynamic lip with an optimised front angle offers good leakage control, reduced friction and long service life. At low and zero pressure, the metal spring provides the primary sealing force.

As the system pressure increases, the main sealing force is achieved by the system pressure and ensures a tight seal from zero to high pressure. The possibility of matching suitable materials for the seal and the spring allows use in a wide range of applications beyond the field of hydraulics, e.g. in the chemical, pharmaceutical and foodstuffs industry.

Operating conditions	**see page 8**
Pressure	
T40	≤ 40 MPa
T05	≤ 20 MPa
Z80	≤ 40 MPa
Temperature	
T40 / T05	-70°C to 260°C
Z80	-70°C to 80°C
Speed	
T40 / T05	≤ 15 m/s
Z80	≤ 2 m/s
Fluids	**see pages 22-45**

Materials	**see pages 10-19**
Seal ①	T40, T05, Z80
Spring ②	AISI 301 = S On demand: Elgiloy®, Hastelloy®

Assembly	**see pages 54-59**
On one-piece pistons Ⓐ	
On two-piece pistons Ⓑ	

Advantage

- Resistant to the most fluids
- Low coefficient of friction
- High abrasion resistance
- No stick-slip: precision of operating control
- Small section
- Very high temperature range

Serie	D (mm)	d (mm)	L (mm)	F (mm)	r1 (mm)	r2 (mm)	A (mm)	B (mm)	C (mm)	e (mm) 2 MPa	e (mm) 10 MPa	e (mm) 20 MPa	e (mm) 40 MPa
PVA0	6→13,9	**D** - 2,9	2,4	0,4	0,25	0,15	0,3	1,2	0,7	≤ 0,2	≤ 0,1	≤ 0,08	≤ 0,05
PVA1	14→24,9	**D** - 4,5	3,6	0,6	0,4	0,15	0,4	1,5	1,1	≤ 0,25	≤ 0,15	≤ 0,1	≤ 0,07
PVA2	25→45,9	**D** - 6,2	4,8	0,7	0,4	0,2	0,4	2,5	1,3	≤ 0,35	≤ 0,2	≤ 0,15	≤ 0,08
PVA3	46→124,9	**D** - 9,4	7,1	0,8	0,4	0,25	0,6	4,5	1,4	≤ 0,5	≤ 0,25	≤ 0,2	≤ 0,1
PVA4	125→999,9	**D** - 12,2	9,5	0,9	0,5	0,25	0,6	6	1,6	≤ 0,6	≤ 0,3	≤ 0,25	≤ 0,12
PVA5	1000→2600	**D** - 19	15	1,5	0,5	0,4	0,9	11	2,6	≤ 0,9	≤ 0,5	≤ 0,4	≤ 0,2

For special requirements (fluid, temperature, pressure, speed...) or applications approaching maximum values, please contact us. Other materials available: **FPM**, **HNBR**, **TNBR**, **EPDM**...

D	d	L	ISO 3320	Reference
10	7,1	2,4	•	**17PVA 000100-T40S**
12	9,1	2,4	•	**17PVA 000120-T40S**
14	9,5	3,6	•	**17PVA 100140-T40S**
16	11,5	3,6	•	**17PVA 100160-T40S**
20	15,5	3,6	•	**17PVA 100200-T40S**
25	18,8	4,8	•	**17PVA 200250-T40S**
32	25,8	4,8	•	**17PVA 200320-T40S**
35	28,8	4,8	•	**17PVA 200350-T40S**
40	33,8	4,8	•	**17PVA 200400-T40S**
45	38,8	4,8	•	**17PVA 200450-T40S**
50	40,6	7,1	•	**17PVA 300500-T40S**
60	50,6	7,1		**17PVA 300600-T40S**
63	53,6	7,1	•	**17PVA 300630-T40S**
70	60,6	7,1		**17PVA 300700-T40S**
80	70,6	7,1	•	**17PVA 300800-T40S**
100	90,6	7,1	•	**17PVA 301000-T40S**
125	112,8	9,5	•	**17PVA 401250-T40S**
160	147,8	9,5	•	**17PVA 401600-T40S**
200	187,8	9,5	•	**17PVA 402000-T40S**

17PVA seals with diameters between 20 and 1500 mm can be manufactured within short delivery time.
For prices and availability: **www.all-tec-business.net**