3a Rubber rod seals

Profile	Reference	Press. ≤ (MPa) ✱	Temp. (°C) ✱	Speed (m/s) ✱	Material	Dimensions (mm)	mm	inch	Page
	10DDI 10DDIM	12	-30 +100	0,5	NBR	3/16" … 8"1/4 8 … 180	 ●	●	262 - 263 264 - 265
	10DDIM.../C 11DDIM.../C FPM	12	-30 +100 -10 +180	0,5	NBR FPM	4 … 130 10 … 100	● ●		266 - 267 268 - 269
	10DUM.../N	12	-30 +100	0,5	NBR	4 … 200	●		270 - 275
	10DUM 10DU	12	-30 +100	0,5	NBR	5 … 450 3/16" … 5"1/4	●	 ●	276 - 279
	10DH	4	-30 +100	0,5	NBR	3/16" … 5"		●	280 - 281
	10TRO	35	-35 +100	0,5	NBR/POM	9/16" … 10"		●	282 - 283
	10B	25	-30 +130	0,5	NBR/NBR-C	6 … 320	●	●	284 - 287
	10B.../M	25	-30 +110	0,5	NBR/NBR-C	5 … 200	●		288 - 289
	10B.../NEI	40	-30 +110	0,5	NBR/NBR-C/POM	12 … 220	●	●	290 - 297
	11B...FPM-C 11B.../NEI FPM-C	25 40	-20 +150 -20 +150	0,5	FPM/FPM-C FPM/FPM-C/PTFE	16 ... 125	●		298 - 299
	10BLT	40	-55 +100	1	TNBR/PU	25 … 105	●		300 - 301
	10CH	40	-30 +120	0,5	NBR/NBR-C/POM	10 … 500	●	●	302 - 307
	10CH.../NEI	50	-30 +120	0,5	NBR/NBR-C/POM	30 … 250	●	●	308 - 309
	10CH...-V	40	-30 +120	0,5	NBR-C	30 … 500	●	●	310 - 313
	10CH1	40	-30 +105	0,5	NBR/NBR-C	8 … 200	●		314 - 315
	11CH1...FPM-C	40	-20 +150	0,5	FPM-C	20 … 200	●		314 - 315
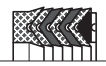	10CH2	50	-30 +105	0,5	NBR/NBR-C	20 … 200	●		316 - 317
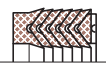	11CH2...FPM-C	50	-20 +150	0,5	FPM-C	20 … 200	●		316 - 317
	10SM	70	-30 +110	0,5	NBR/NBR-C/POM	20 … 280	●		318 - 321
	10SM.../M	25	-30 +110	0,5	NBR/NBR-C/POM	40 … 100	●		322 - 323

✱ See page 8

3b PU rod seals

Profile	Reference	Press. ≤ (MPa) ✱	Temp. (°C) ✱	Speed (m/s) ✱	Material	Dimensions (mm)	mm	inch	Page
	10EU	40	-30 +100	0,5	PU	8 … 250	●		324 - 331
	10EU.../ET	40	-40 +130	0,5	PU	20 … 180	●		332 - 333
	10EU/I	40	-30 +100	0,5	PU	3/4" … 4"1/2		●	334 - 335
	10RS.../L	40	-30 +100	0,5	PU	5 … 212	●		336 - 341
	12TDT HUNGER Dichtungen	36	-35 +100	1	PU	63 … 200	●		342 - 343
	10RS.../LA	50	-30 +100	0,5	PU/POM	40 … 200	●		344 - 345
	10TS	40	-30 +100	0,5	PU	6 … 277	●		346 - 347
	10TS.../L	40	-30 +100	0,5	PU	6 … 210	●		348 - 353
	10TS.../LA	50	-30 +100	0,5	PU/POM	40 … 140	●		354 - 355
	10MU	40	-30 +100	0,5	PU	3 … 360	●		356 - 373
	10EUS/I	40	-30 +100	0,5	PU/NBR	1/4" … 8"1/2		●	374 - 377
	10EUS.../LA	50	-30 +100	0,5	PU/NBR/POM	40 … 150	●		378 - 379
	10EUS.../NEI	50	-30 +100	0,5	PU/NBR/PU	40 … 150	●		380 - 381
	12TDI HUNGER Dichtungen	36	-35 +100	1	PU/PTFE-Bronze	20 … 530	●		382 - 383
	10EUS/C	25	-30 +100	0,5	PU/NBR	12 … 190	●		384 - 385
	10BUF BUFFER	40	-30 +100	0,5	PU	25 … 100 1"1/4 … 6"	●	●	386 - 387
	10IBF BUFFER	40	-30 +100	0,5	PU/POM	40 … 200	●		388 - 389
	10IBU BUFFER	50	-40 +100	0,5	PU/POM	60 … 90	●		390 - 391
	10I/GH	50	-30 +100	0,5	TPE/NBR	10 … 110	●		392 - 393

3c PTFE rod seals

Profile	Reference	Press. ≤ (MPa)✱	Temp. (°C)✱	Speed (m/s)✱	Material	Dimensions (mm)	mm	inch	Page
	10I/GR...B **10I/GRINCH...B**	50	-30 +100	15	**PTFE/NBR**	5 … 650 1” … 4”	●	●	**394 - 401** **402 - 403**
	11I/GR...B	50	-20 +200	15	**PTFE/FPM**	20 … 160	●		**404 - 405**
	10I/GR-ISO...B	50	-30 +100	15	**PTFE/NBR**	22 … 160	●		**406 - 407**
	10I/GR...A	50	-30 +100	15	**PTFE/NBR**	12 … 250	●		**408 - 409**
	10VOR	20	-70 +260	15	**PTFE/SS**	8 … 100	●		**410 - 411**

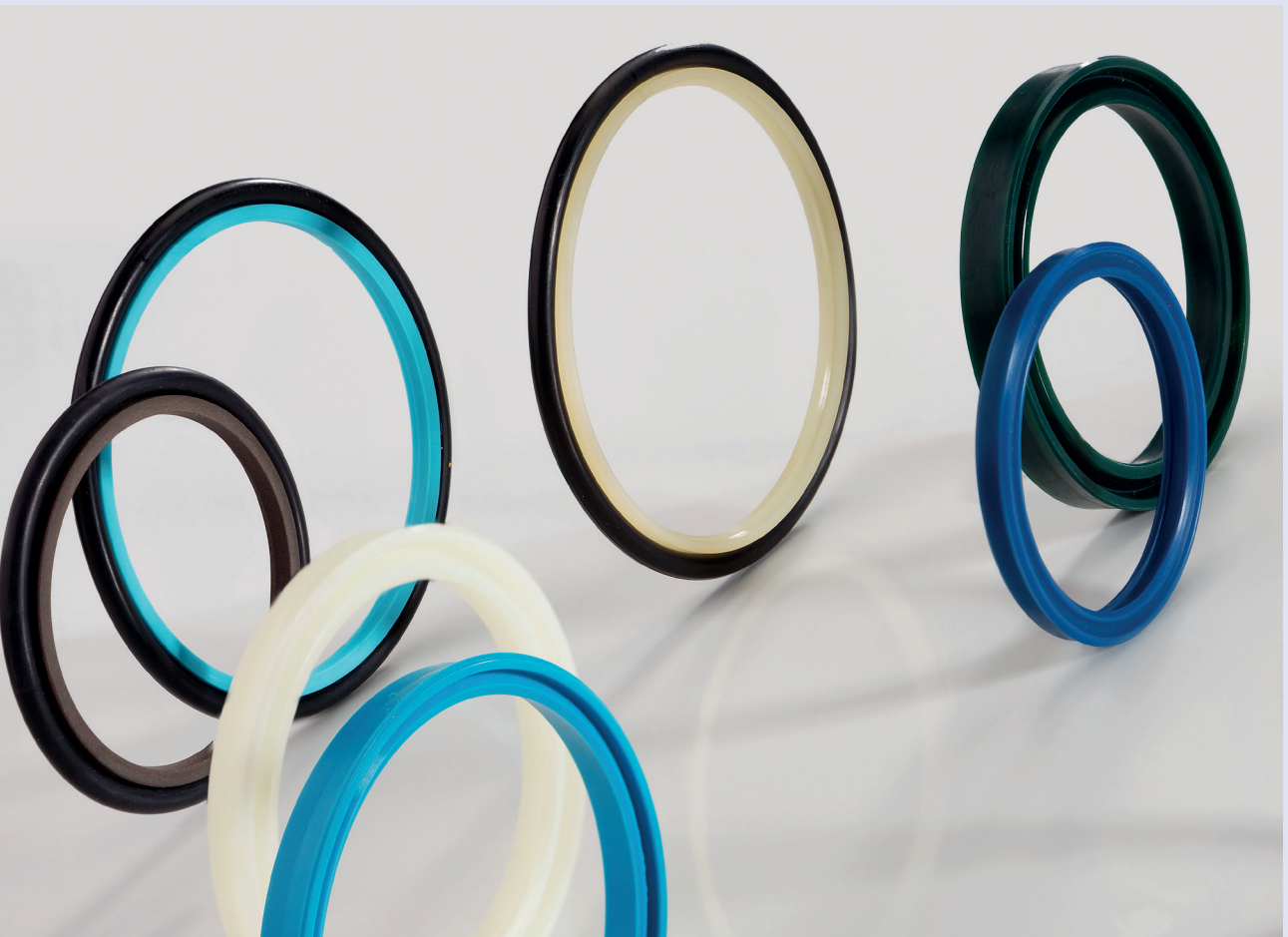

3d TSS rod seals

Profile	Reference	Press. ≤ (MPa)✱	Temp. (°C)✱	Speed (m/s)✱	Material	Dimensions (mm)	mm	inch	Page
	17RL Zurcon® L-Cup®	40	-35 +110	0,5	**Zurcon® Z20**	8 … 250	●		**412 - 413**
	17RU9 Zurcon® U-Cup® RU9	40	-35 +110	0,5	**Zurcon® Z20**	10 … 130	●		**414 - 415**
	17RR Zurcon® Rimseal	25	-30 +100	0,5	**Zurcon® Z54/NBR**	10 … 420	●		**416 - 417**
	17RSK Turcon® Stepseal® 2K	50	-30 +100 -20 +200	15	**Turcon® T46/NBR** **Turcon® T46/FPM**	4 … 400	●		**418 - 421**
	17RSK...-Z Zurcon® Stepseal® 2K	80 35	-30 +100 -30 +80	2	**Zurcon® Z53/NBR** **Zurcon® Z80/NBR**	25 … 280	●		**422 - 423**
	17RSV Turcon® Stepseal® V	50	-30 +100	15	**Turcon® T46/NBR** **Turcon® M12/NBR**	56 … 400	●		**424 - 425**
	17RT Turcon® Glyd Ring® T	50	-30 +100 -20 +200	15	**Turcon® T46/NBR** **Turcon® T46/FPM**	12 … 160	●		**426 - 427**
	17RDD Turcon® Double Delta®	35	-30 +100 -20 +200	15	**Turcon® T46/NBR** **Turcon® T46/FPM**	6 … 160	●		**428 - 429**
	17RQB Turcon® AQ-Seal®	40	-30 + 100	2	**Turcon® T46/NBR/** **Zurcon® Z54**	19 … 130	●		**430 - 431**
	17RVA Turcon® Variseal® M2	45	-70 +260	15	**Turcon® T40/SS**	3 … 110	●		**432 - 433**

✱ See page 8

ALL-TEC SEALING SYSTEMS

10DDI

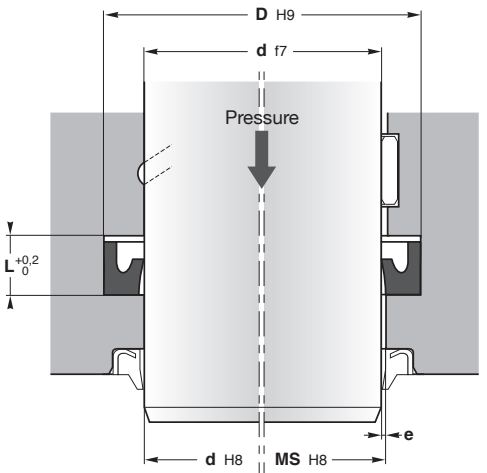

e (mm) ≤ 0,3 - 0,01xP (MPa)

MS = d + 2e

Machining of housings: see pages 48-49

10DDI inch rod U-rings are designed with a shorter inner sealing lip.

Only for rod applications (inch dimensions).

Operating conditions	**see page 8**
Pressure	≤ 12 MPa
Temperature	-30°C to 100°C
Speed	≤ 0,5 m/s
Fluids	**see pages 22-45**

Materials	**see pages 10-19**
	NBR 90 Sh A

Assembly	**see pages 54-59**
In closed grooves	

Advantages

Low friction

Good price-performance ratio

Please contact us for applications approaching maximum values.

More information

On **www.all-tec-business.net**, click first on the reference and then on the material code to obtain the data sheet of the material.

d	D	L	Reference
4,76	11,11	5,5	**10DDI 018**
7,93	14,28	5,5	**10DDI 031**
9,52	16,5	5,5	**10DDI 037**
12,7	21	7	**10DDI 050**
15,87	22,22	6	**10DDI 062**
17,46	23,81	6	**10DDI 068**
19,05	25,4	6	**10DDI 075**
20,63	28,58	6	**10DDI 081**
22,22	31,75	6	**10DDI 087**
23,81	36,51	8	**10DDI 093**
25,4	38,1	8	**10DDI 100**
26,99	36,51	8	**10DDI 106**
28,58	41,28	9,5	**10DDI 112**
31,75	44,45	8	**10DDI 125**
34,93	50,8	9,5	**10DDI 137**
38,1	50,8	11	**10DDI 150**
39,69	55,96	11	**10DDI 156**
41,28	50,8	7	**10DDI 162**
44,45	57,15	9,5	**10DDI 175**
47,63	63,5	11	**10DDI 187**
50,8	73,03	12,5	**10DDI 200**
53,98	69,85	11	**10DDI 212**
57,15	69,85	9,5	**10DDI 225**
60,33	76,2	9,5	**10DDI 237**
63,5	76,2	9,5	**10DDI 250**
69,85	90,9	11	**10DDI 275**
76,2	88,9	11	**10DDI 300**
79,38	98,43	11	**10DDI 312**
82,55	95,25	9,5	**10DDI 325**
85,73	98,43	11	**10DDI 337**
88,9	101,6	11	**10DDI 350**
95,25	111,1	11	**10DDI 375**
101,6	111,1	7	**10DDI 400**
107,95	127	11	**10DDI 425**
114,3	146,05	14	**10DDI 450**
120,65	136,5	8,5	**10DDI 475**
127	146,05	14	**10DDI 500**
209,55	228,6	14	**10DDI 825**

For special requirements (fluid, temperature, pressure, speed...) or applications approaching maximum values, please contact us. Other materials available: **FPM**, **HNBR**, **TNBR**, **EPDM**...

10DDI seals with diameters between 20 and 1500 mm can be manufactured within short delivery time.
For prices and availability: **www.all-tec-business.net**

10DDIM

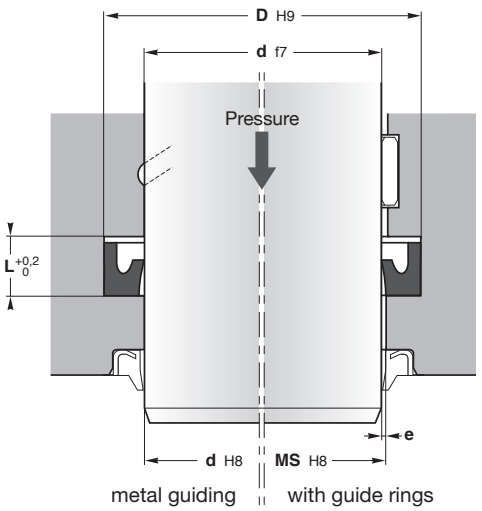

e (mm) ≤ 0,3 - 0,01xP (MPa)

MS = d + 2e

Machining of housings: see pages 48-49

10DDIM metric rod U-rings are designed with a shorter inner sealing lip.

Only for rod applications (metric dimensions).

Operating conditions	**see page 8**
Pressure	≤ 12 MPa
Temperature	-30°C to 100°C
Speed	≤ 0,5 m/s
Fluids	**see pages 22-45**

Materials	**see pages 10-19**
	NBR 90 Sh A

Assembly	**see pages 54-59**
In closed grooves	

Advantages

- Low friction
- Good price-performance ratio

Please contact us for applications approaching maximum values.

More information

On **www.all-tec-business.net**, click first on the reference and then on the material code to obtain the data sheet of the material.

d	D	L	Reference
6	12	4,5	**10DDIM 0612**
8	14	4,5	**10DDIM 0814**
	16	6	**10DDIM 0816**
10	18	6	**10DDIM 1018**
12	20	6	**10DDIM 1220**
14	22	6	**10DDIM 1422**
16	24	6	**10DDIM 1624**
18	25	5	**10DDIM 1825**
	26	6	**10DDIM 1826**
20	28	6	**10DDIM 2028**
22	30	6	**10DDIM 2230**
25	35	7,5	**10DDIM 2535**
28	36	6	**10DDIM 2836**
	38	7,5	**10DDIM 2838**
32	42	7,5	**10DDIM 3242**
36	46	7,5	**10DDIM 3646**
40	50	7,5	**10DDIM 4050**

d	D	L	Reference
45	55	7,5	**10DDIM 4555**
50	60	7,5	**10DDIM 5060**
56	68	7,5	**10DDIM 5668**
	68	9,5	**10DDIM 5668/1**
60	72	9,5	**10DDIM 6072**
63	75	9,5	**10DDIM 6375**
65	77	9,5	**10DDIM 6577**
70	82	9,5	**10DDIM 7082**
80	92	9,5	**10DDIM 8092**
90	102	9,5	**10DDIM 90102**
100	112	9,5	**10DDIM 100112**
	115	11	**10DDIM 100115**
110	130	15	**10DDIM 110130**
125	145	15	**10DDIM 125145**
140	160	15	**10DDIM 140160**
160	180	15	**10DDIM 160180**
180	200	15	**10DDIM 180200**

For special requirements (fluid, temperature, pressure, speed...) or applications approaching maximum values, please contact us. Other materials available: **FPM**, **HNBR**, **TNBR**, **EPDM**...

10DDIM seals with diameters between 20 and 1500 mm can be manufactured within short delivery time.
For prices and availability: **www.all-tec-business.net**

ALL-TEC SEALING SYSTEMS

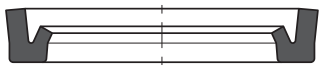

10DDIM.../C

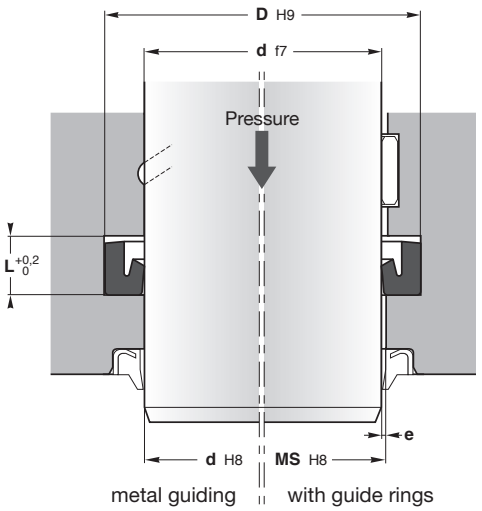

e (mm) ≤ 0,3 - 0,01xP (MPa)

MS = d + 2e

Machining of housings: see pages 48-49

10DDIM.../C single acting rod seal can be used in hydraulic or pneumatic cylinders.

This NBR profile is designed with a shorter inner sealing lip which ensures **low friction**.

Operating conditions	see page 8
Pressure	≤ 12 MPa
Temperature	-30°C to 100°C
Speed	≤ 0,5 m/s
Fluids	see pages 22-45

Materials	see pages 10-19
	NBR 80 Sh A

Assembly	see pages 54-59
In closed grooves	

Advantages

- Easy installation
- Low friction
- Good price-performance ratio
- Compact housing

Please contact us for applications approaching maximum values.

More information

On **www.all-tec-business.net**, click first on the reference and then on the material code to obtain the data sheet of the material.

d	D	L	Reference
4	9	4	**10DDIM 0409/C**
	10	4,7	**10DDIM 0410/C**
6	10	3,5	**10DDIM 0610/C**
8	14	4,5	**10DDIM 0814/C**
9	14	4	**10DDIM 0914/C**
10	13,6	2,7	**10DDIM 1013/C**
	15	4	**10DDIM 1015/C**
	16	5	**10DDIM 1016/C**
12	18,5	5	**10DDIM 1218/C**
16	22,5	5	**10DDIM 1622/C**
	24	6	**10DDIM 1624/C**
19	25	5,5	**10DDIM 1925/C**
20	28	6	**10DDIM 2028/C**
22	30	6	**10DDIM 2230/C**
25	33	6	**10DDIM 2533/C**
28	36	6	**10DDIM 2836/C**
30	40	7,5	**10DDIM 3040/C**

d	D	L	Reference
32	42	7,5	**10DDIM 3242/C**
35	45	7,5	**10DDIM 3545/C**
36	46	7,5	**10DDIM 3646/C**
40	50	7,5	**10DDIM 4050/C**
45	55	7,5	**10DDIM 4555/C**
50	60	7,5	**10DDIM 5060/C**
56	66	7,5	**10DDIM 5666/C**
60	72	9,5	**10DDIM 6072/C**
63	75	9,5	**10DDIM 6375/C**
70	82	9,5	**10DDIM 7082/C**
80	92	9,5	**10DDIM 8092/C**
90	102	9,5	**10DDIM 90102/C**
95	107	9,5	**10DDIM 95107/C**
100	115	11	**10DDIM 100115/C**
130	145	11	**10DDIM 130145/C**

For special requirements (fluid, temperature, pressure, speed...) or applications approaching maximum values, please contact us. Other materials available: **FPM**, **HNBR**, **TNBR**, **EPDM**...

10DDIM.../C seals with diameters between 20 and 1500 mm can be manufactured within short delivery time.
For prices and availability: **www.all-tec-business.net**

ALL-TEC SEALING SYSTEMS

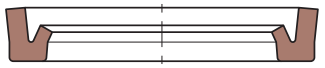

11DDIM.../C FPM

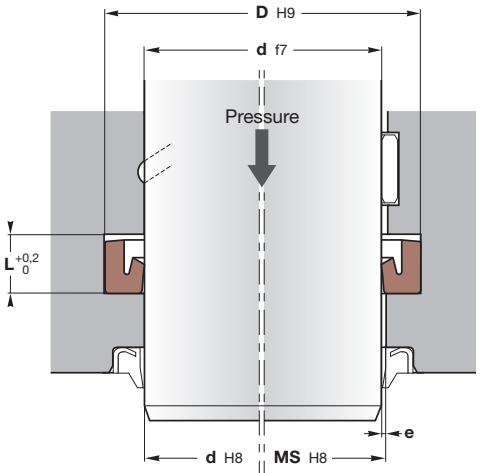

e (mm) ≤ 0,3 - 0,01xP (MPa)

MS = d + 2e

Machining of housings: see pages 48-49

11DDIM.../C FPM single acting rod seal can be used in hydraulic or pneumatic cylinders. This FPM profile is designed with a shorter inner sealing lip which ensures low friction.

11DDIM.../C FPM is especially suitable for applications with aggressive fuels and chemicals or at high temperature up to 180°C.

Operating conditions	**see page 8**
Pressure	≤ 12 MPa
Temperature	-10°C to 180°C
Speed	≤ 0,5 m/s
Fluids	**see pages 22-45**

Materials	**see pages 10-19**
	FPM 80 Sh A

Assembly	**see pages 54-59**
In closed grooves	

Advantages

- Easy installation
- Low friction
- Good price-performance ratio
- Compact housing

Please contact us for applications approaching maximum values.

More information

On **www.all-tec-business.net**, click first on the reference and then on the material code to obtain the data sheet of the material.

d	D	L	Reference
10	18	6	**11DDIM 1018/C FPM**
12	18,5	5	**11DDIM 1218/C FPM**
16	22,5	5	**11DDIM 1622/C FPM**
18	26	6	**11DDIM 1826/C FPM**
20	28	6	**11DDIM 2028/C FPM**
22	30	6	**11DDIM 2230/C FPM**
25	33	6	**11DDIM 2533/C FPM**
28	36	6	**11DDIM 2836/C FPM**
30	40	7,5	**11DDIM 3040/C FPM**
32	42	7,5	**11DDIM 3242/C FPM**
36	46	7,5	**11DDIM 3646/C FPM**
40	50	7,5	**11DDIM 4050/C FPM**
45	55	7,5	**11DDIM 4555/C FPM**
50	60	7,5	**11DDIM 5060/C FPM**
56	66	7,5	**11DDIM 5666/C FPM**
60	72	9,5	**11DDIM 6072/C FPM**
63	75	9,5	**11DDIM 6375/C FPM**
70	82	9,5	**11DDIM 7082/C FPM**
80	92	9,5	**11DDIM 8092/C FPM**
90	102	9,5	**11DDIM 90102/C FPM**
100	115	11	**11DDIM 100115/C FPM**

For special requirements (fluid, temperature, pressure, speed...) or applications approaching maximum values, please contact us. Other materials available: **FPM**, **HNBR**, **TNBR**, **EPDM**...

11DDIM.../C FPM seals with diameters between 20 and 1500 mm can be manufactured within short delivery time.
For prices and availability: **www.all-tec-business.net**

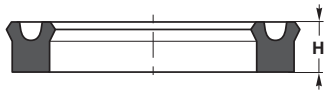

10DUM.../N

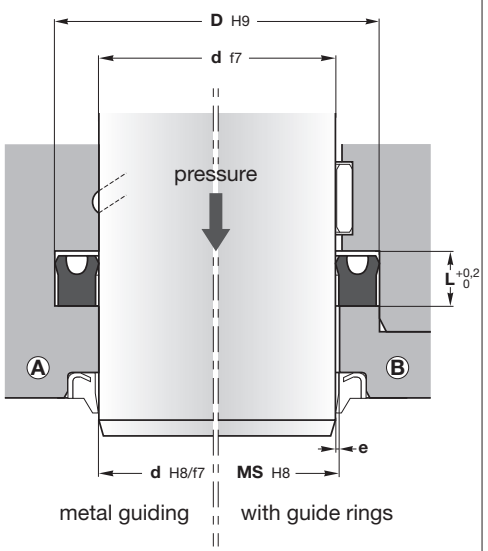

e (mm) ≤ 0,3 - 0,01xP (MPa)

MS = d + 2e

Machining of housings: see pages 48-49

10DUM.../N U-ring has a symmetrical design which allows it to be used as a piston seal and as a rod seal. Besides its application in hydraulics, this design can also be used for pneumatic applications.

Operating conditions	see page 8
Pressure	≤ 12 MPa
Temperature	-30°C to 100°C
Speed	≤ 0,5 m/s
Fluids	see pages 22-45

Materials	see pages 10-19
	90° Shore A NBR

Assembly	see pages 54-59
In closed grooves Ⓐ	
In open grooves Ⓑ	

Advantages

- Low friction
- Good price-performance ratio
- Symmetric seal for rods and pistons

Please contact us for applications approaching maximum values.

More information

On **www.all-tec-business.net**, click first on the reference and then on the material code to obtain the data sheet of the material.

For special requirements (fluid, temperature, pressure, speed...) or applications approaching maximum values, please contact us. Other materials available: **FPM**, **HNBR**, **TNBR**, **EPDM**...

d	D	L	Reference
4	12	4,5	**10DUM 1204/N**
5	13	4,5	**10DUM 1305/N**
	15	5,5	**10DUM 1505/N**
6	14	4,5	**10DUM 1406/N**
	16	5,5	**10DUM 1606/N**
7	15	4,5	**10DUM 1507/N**
8	16	4,5	**10DUM 1608/N**
	16	9	**10DUM 1608/1/N**
	18	5,5	**10DUM 1808/N**
	20	6,6	**10DUM 2008/N**
10	18	4,5	**10DUM 1810/N**
	20	5,5	**10DUM 2010/N**
	20	9	**10DUM 2010/1/N**
	22	6,6	**10DUM 2210/N**
	22	9	**10DUM 2210/1/N**
	25	11	**10DUM 2510/1/N**
12	20	4,5	**10DUM 2012/N**
	22	5,5	**10DUM 2212/N**
	24	6,6	**10DUM 2412/N**
	24	11	**10DUM 2412/1/N**
13	25	6,6	**10DUM 2513/N**
14	22	4,5	**10DUM 2214/N**
	24	5,5	**10DUM 2414/N**
	28	11	**10DUM 2814/N**
15	25	5,5	**10DUM 2515/N**
	27	6,6	**10DUM 2715/N**
	28	11	**10DUM 2815/N**
	30	8,3	**10DUM 3015/N**
	30	11	**10DUM 3015/1/N**
16	24	4,5	**10DUM 2416/N**
	26	5,5	**10DUM 2616/N**
	26	7	**10DUM 2616/1/N**
	28	6,6	**10DUM 2816/N**
	32	11	**10DUM 3216/N**

d	D	L	Reference
17	25	4,5	**10DUM 2517/N**
18	26	4,5	**10DUM 2618/N**
	28	5,5	**10DUM 2818/N**
	30	6,6	**10DUM 3018/N**
	30	11	**10DUM 3018/1/N**
20	27	7	**10DUM 2720/N**
	28	4,5	**10DUM 2820/N**
	30	5,5	**10DUM 3020/N**
	30	9	**10DUM 3020/1/N**
	32	6,6	**10DUM 3220/N**
	35	8,3	**10DUM 3520/N**
	35	11	**10DUM 3520/1/N**
	36	11	**10DUM 3620/N**
	40	13	**10DUM 4020/N**
21	33	6,6	**10DUM 3321/N**
22	30	4,5	**10DUM 3022/N**
	32	5,5	**10DUM 3222/N**
	32	9	**10DUM 3222/1/N**
	34	6,6	**10DUM 3422/N**
	34	11	**10DUM 3422/1/N**
	38	11	**10DUM 3822/N**
23	35	6,6	**10DUM 3523/N**
24	32	4,5	**10DUM 3224/N**
	34	5,5	**10DUM 3424/N**
	34	6	**10DUM 3424/1/N**
	36	6,6	**10DUM 3624/N**
	40	9	**10DUM 4024/N**
25	33	4,5	**10DUM 3325/N**
	33	6	**10DUM 3325/1/N**
	35	5,5	**10DUM 3525/N**
	35	11	**10DUM 3525/1/N**
	37	6,6	**10DUM 3725/N**
	40	8,3	**10DUM 4025/N**
	40	11	**10DUM 4025/1/N**
	45	11	**10DUM 4525/N**
26	34	4,5	**10DUM 3426/N**
	36	5,5	**10DUM 3626/N**
	38	6,6	**10DUM 3826/N**
27	35	4,5	**10DUM 3527/N**

10DUM.../N seals with diameters between 20 and 1500 mm can be manufactured within short delivery time.
For prices and availability: **www.all-tec-business.net**

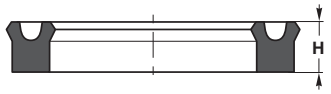

10DUM.../N

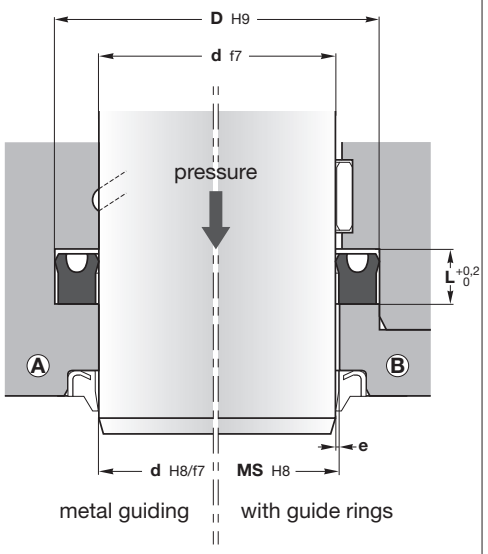

e (mm) ≤ 0,3 - 0,01xP (MPa)

MS = d + 2e

Machining of housings: see pages 48-49

10DUM.../N U-ring has a symmetrical design which allows it to be used as a piston seal and as a rod seal. Besides its application in hydraulics, this design can also be used for pneumatic applications.

Operating conditions	**see page 8**
Pressure	≤ 12 MPa
Temperature	-30°C to 100°C
Speed	≤ 0,5 m/s
Fluids	**see pages 22-45**

Materials	**see pages 10-19**
	90° Shore A NBR

Assembly	**see pages 54-59**
In closed grooves Ⓐ	
In open grooves Ⓑ	

Advantages

- Low friction
- Good price-performance ratio
- Symmetric seal for rods and pistons

Please contact us for applications approaching maximum values.

More information

On **www.all-tec-business.net**, click first on the reference and then on the material code to obtain the data sheet of the material.

For special requirements (fluid, temperature, pressure, speed...) or applications approaching maximum values, please contact us. Other materials available: **FPM**, **HNBR**, **TNBR**, **EPDM**...

d	D	L	Reference
28	36	4,5	**10DUM 3628/N**
	38	5,5	**10DUM 3828/N**
	40	6,6	**10DUM 4028/N**
	44	9	**10DUM 4428/N**
	48	13	**10DUM 4828/N**
29	37	4,5	**10DUM 3729/N**
30	38	4,5	**10DUM 3830/N**
	38	6,5	**10DUM 3830/1/N**
	40	5,5	**10DUM 4030/N**
	42	11	**10DUM 4230/N**
	45	8,3	**10DUM 4530/N**
	45	11	**10DUM 4530/1/N**
	50	13	**10DUM 5030/N**
32	40	4,5	**10DUM 4032/N**
	42	5,5	**10DUM 4232/N**
	44	6,6	**10DUM 4432/N**
	45	11	**10DUM 4532/N**
	50	13	**10DUM 5032/N**
33	43	7	**10DUM 4333/1/N**
	45	6,6	**10DUM 4533/N**
35	45	5,5	**10DUM 4535/N**
	45	9	**10DUM 4535/1/N**
	50	8,3	**10DUM 5035/N**
	52	13	**10DUM 5235/N**
	55	11	**10DUM 5535/N**
	55	13	**10DUM 5535/1/N**
36	46	5,5	**10DUM 4636/N**
38	48	5,5	**10DUM 4838/N**
	50	6,6	**10DUM 5038/N**
	50	7	**10DUM 5038/1/N**
39	58	11	**10DUM 5839/N**
40	50	5,5	**10DUM 5040/N**
	50	7	**10DUM 5040/1/N**
	50	11	**10DUM 5040/2/N**
	52	6,6	**10DUM 5240/N**
	55	8,3	**10DUM 5540/N**
	55	11	**10DUM 5540/1/N**
	56	11	**10DUM 5640/N**
	60	11	**10DUM 6040/N**
	60	13	**10DUM 6040/1/N**

d	D	L	Reference
42	52	5,5	**10DUM 5242/N**
	62	13	**10DUM 6242/N**
43	55	6,6	**10DUM 5543/N**
45	55	5,5	**10DUM 5545/N**
	55	11	**10DUM 5545/1/N**
	58	11	**10DUM 5845/N**
	60	8,3	**10DUM 6045/N**
	60	11	**10DUM 6045/1/N**
	63	13	**10DUM 6345/N**
	65	13	**10DUM 6545/N**
46	56	5,5	**10DUM 5646/N**
	58	6,6	**10DUM 5846/N**
48	60	6,6	**10DUM 6048/N**
	68	13	**10DUM 6848/N**
50	60	5,5	**10DUM 6050/N**
	60	7,5	**10DUM 6050/3/N**
	60	9	**10DUM 6050/1/N**
	60	11	**10DUM 6050/2/N**
	62	6,6	**10DUM 6250/N**
	63	11	**10DUM 6350/N**
	65	8,3	**10DUM 6550/N**
	65	11	**10DUM 6550/1/N**
	65	13	**10DUM 6550/2/N**
	70	11	**10DUM 7050/N**
	70	13	**10DUM 7050/1/N**
51	63	6,6	**10DUM 6351/N**
52	72	11	**10DUM 7252/N**
53	63	5,5	**10DUM 6353/N**
	63	7	**10DUM 6353/1/N**
	65	6,6	**10DUM 6553/N**
54	66	6,6	**10DUM 6654/N**
55	65	5,5	**10DUM 6555/N**
	65	7	**10DUM 6555/1/N**
	67	6,6	**10DUM 6755/N**

10DUM.../N seals with diameters between 20 and 1500 mm can be manufactured within short delivery time.
For prices and availability: **www.all-tec-business.net**

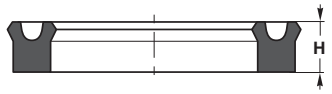

10DUM.../N

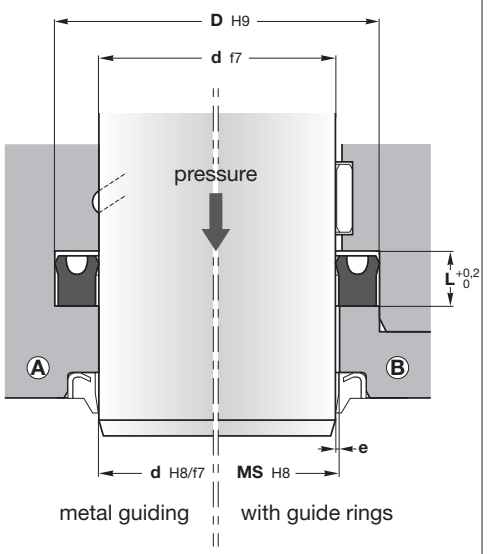

e (mm) ≤ 0,3 - 0,01xP (MPa)

MS = d + 2e

Machining of housings: see pages 48-49

10DUM.../N U-ring has a symmetrical design which allows it to be used as a piston seal and as a rod seal. Besides its application in hydraulics, this design can also be used for pneumatic applications.

Operating conditions	**see page 8**
Pressure	≤ 12 MPa
Temperature	-30°C to 100°C
Speed	≤ 0,5 m/s
Fluids	**see pages 22-45**

Materials	**see pages 10-19**
	90° Shore A NBR

Assembly	**see pages 54-59**
In closed grooves Ⓐ	
In open grooves Ⓑ	

Advantages

- Low friction
- Good price-performance ratio
- Symmetric seal for rods and pistons

Please contact us for applications approaching maximum values.

More information

On **www.all-tec-business.net**, click first on the reference and then on the material code to obtain the data sheet of the material.

For special requirements (fluid, temperature, pressure, speed...) or applications approaching maximum values, please contact us. Other materials available: **FPM**, **HNBR**, **TNBR**, **EPDM**...

d	D	L	Reference
55	70	8,3	**10DUM 7055/N**
	75	13	**10DUM 7555/N**
	80	16	**10DUM 8055/N**
56	76	13	**10DUM 7656/N**
	80	16	**10DUM 8056/N**
60	70	5,5	**10DUM 7060/N**
	75	8,3	**10DUM 7560/N**
	75	13	**10DUM 7560/1/N**
	80	11	**10DUM 8060/1/N**
	80	13	**10DUM 8060/N**
63	73	5,5	**10DUM 7363/N**
	73	7	**10DUM 7363/1/N**
	83	13	**10DUM 8363/N**
65	75	5,5	**10DUM 7565/N**
	80	8,3	**10DUM 8065/N**
	80	13	**10DUM 8065/1/N**
	85	13	**10DUM 8565/N**
70	80	5,5	**10DUM 8070/N**
	85	8,3	**10DUM 8570/N**
	90	13	**10DUM 9070/N**
75	85	13	**10DUM 8575/1/N**
	90	8,3	**10DUM 9075/N**
	90	11	**10DUM 9075/1/N**
	95	13	**10DUM 9575/N**
80	90	5,5	**10DUM 9080/N**
	90	7	**10DUM 9080/1/N**
	95	8,3	**10DUM 9580/N**
	100	13	**10DUM 10080/N**
	100	16	**10DUM 10080/1/N**
85	95	5,5	**10DUM 9585/N**
	100	8,3	**10DUM 100085/N**
	100	13	**10DUM 10085/1/N**
	105	16	**10DUM 10585/N**
90	100	5,5	**10DUM 100090/N**
	105	8,3	**10DUM 105090/N**
	105	13	**10DUM 10590/1/N**
	110	16	**10DUM 11090/N**

d	D	L	Reference
95	110	8,3	**10DUM 110095/N**
	115	16	**10DUM 11595/N**
100	110	5,5	**10DUM 110100/N**
	120	13	**10DUM 120100/N**
	120	16	**10DUM 120100/1/N**
	125	16	**10DUM 125100/N**
	130	19	**10DUM 130100/N**
105	120	8,3	**10DUM 120105/N**
	130	19	**10DUM 130105/N**
110	125	8,3	**10DUM 125110/N**
	125	13	**10DUM 125110/1/N**
	130	13	**10DUM 130110/N**
	135	19	**10DUM 135110/N**
	140	19	**10DUM 140110/N**
115	130	8,3	**10DUM 130115/N**
	140	19	**10DUM 140115/N**
120	145	19	**10DUM 145120/N**
	150	19	**10DUM 150120/N**
125	140	8,3	**10DUM 140125/N**
	150	19	**10DUM 150125/N**
	155	19	**10DUM 155125/N**
130	160	19	**10DUM 160130/N**
140	160	16	**10DUM 160140/N**
	170	19	**10DUM 170140/N**
145	160	10	**10DUM 160145/N**
	170	19	**10DUM 170145/N**
	175	19	**10DUM 175145/N**
150	180	19	**10DUM 180150/N**
160	180	16	**10DUM 180160/N**
170	200	23	**10DUM 200170/N**
180	210	23	**10DUM 210180/N**
200	230	23	**10DUM 230200/N**

10DUM.../N seals with diameters between 20 and 1500 mm can be manufactured within short delivery time.
For prices and availability: **www.all-tec-business.net**

Symmetrical NBR U-ring

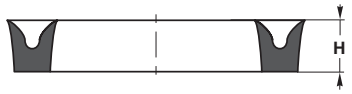

10DUM
10DU

METRIC
INCH

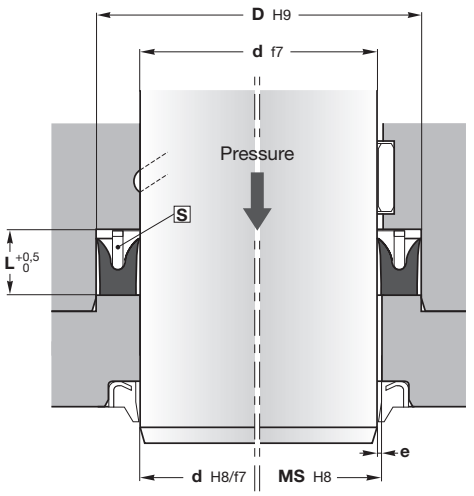

metal guiding | with guide rings

e (mm) ≤ 0,3 - 0,01xP (MPa)

MS = d + 2e

Machining of housings: see pages 48-49

10DUM and **10DU** seals can be used in both rod and piston applications thanks to their symmetrical lip design.

With a wide range of dimensions available, **10DUM** and **10DU** piston/rod seals have an efficient price-performance ratio.

Operating conditions	**see page 8**
Pressure	≤ 12 MPa
Temperature	-30°C to 100°C
Speed	≤ 0,5 m/s
Fluids	**see pages 22-45**

Materials	**see pages 10-19**
	NBR 90 Sh A

Assembly **see pages 54-59**

In open grooves

With profiles 10DU and 10DUM, it's recommended to use a header ring S with the seal

Advantages

Low friction

Can be used for rods and pistons

Please contact us for applications approaching maximum values.

More information

On **www.all-tec-business.net**, click first on the reference and then on the material code to obtain the data sheet of the material.

For special requirements (fluid, temperature, pressure, speed...) or applications approaching maximum values, please contact us. Other materials available: **FPM**, **HNBR**, **TNBR**, **EPDM**...

Inch dimensions page 279

d	D	L	H	Reference
5	12	6,5	5	**10DUM 1205**
6	17	7,5	6	**10DUM 1706**
	18	9,5	8	**10DUM 1806**
	20	9,5	8	**10DUM 2006**
8	15	7,5	6	**10DUM 1508**
	16	7,5	6	**10DUM 1608**
	25	7,5	6	**10DUM 2508**
10	20	9,5	8	**10DUM 2010**
	22	7,5	6	**10DUM 2210**
	25	11,5	10	**10DUM 2510**
	26	9,5	8	**10DUM 2610**
	30	11,5	10	**10DUM 3010**
12	24	7,5	6	**10DUM 2412**
	28	11,5	10	**10DUM 2812**
	35	13,5	12	**10DUM 3512**
13	30	11,5	10	**10DUM 3013**
14	28	11,5	10	**10DUM 2814**
	32	11,5	10	**10DUM 3214**
15	30	9,5	8	**10DUM 3015**
	30	11,5	10	**10DUM 3015/1**
	35	11,5	10	**10DUM 3515**
16	32	9,5	8	**10DUM 3216**
	36	11,5	10	**10DUM 3616**
17	38	11,5	10	**10DUM 3817**
18	30	11,5	10	**10DUM 3018**
	34	9,5	8	**10DUM 3418**
	38	11,5	10	**10DUM 3818**
	40	11,5	10	**10DUM 4018**
20	35	11,5	10	**10DUM 3520**
	36	9,5	8	**10DUM 3620**
	40	11,5	10	**10DUM 4020**
	43	13,5	12	**10DUM 4320**
22	34	11,5	10	**10DUM 3422**
	38	11,5	10	**10DUM 3822**
	42	11,5	10	**10DUM 4222**

Inch dimensions page 279

d	D	L	H	Reference
25	40	11,5	10	**10DUM 4025**
	42	9,5	8	**10DUM 4225**
	45	11,5	10	**10DUM 4525**
	50	13,5	12	**10DUM 5025**
26	46	11,5	10	**10DUM 4626**
28	48	11,5	10	**10DUM 4828**
30	45	11,5	10	**10DUM 4530**
	50	11,5	10	**10DUM 5030**
	60	16,5	15	**10DUM 6030**
32	45	11,5	10	**10DUM 4532**
	52	11,5	10	**10DUM 5232**
35	50	11,5	10	**10DUM 5035**
	55	11,5	10	**10DUM 5535**
	60	13,5	12	**10DUM 6035**
38	58	11,5	10	**10DUM 5838**
40	56	11,5	10	**10DUM 5640**
	60	11,5	10	**10DUM 6040**
	65	13,5	12	**10DUM 6540**
45	65	11,5	10	**10DUM 6545**
46	70	13,5	12	**10DUM 7046**
48	68	11,5	10	**10DUM 6848**
50	70	11,5	10	**10DUM 7050**
55	75	11,5	10	**10DUM 7555**
	80	13,5	12	**10DUM 8055**
	85	16,5	15	**10DUM 8555**
60	80	11,5	10	**10DUM 8060**
	90	16,5	15	**10DUM 9060**
65	85	11,5	10	**10DUM 8565**
	90	13,5	12	**10DUM 9065**
	95	13,5	12	**10DUM 9565**
70	90	11,5	10	**10DUM 9070**
75	95	11,5	10	**10DUM 9575**
	100	16,5	15	**10DUM 100075**
	105	16,5	15	**10DUM 105075**

10DUM and 10DU seals with diameters between 20 and 1500 mm can be manufactured within short delivery time.
For prices and availability: **www.all-tec-business.net**

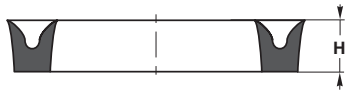

10DUM
10DU

METRIC
INCH

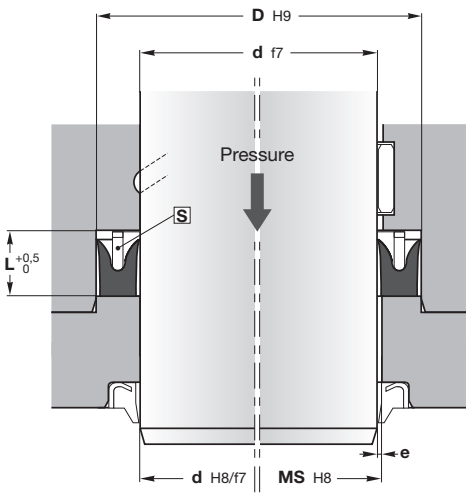

metal guiding | with guide rings

e (mm) ≤ 0,3 - 0,01xP (MPa)

MS = d + 2e

Machining of housings: see pages 48-49

More information

On **www.all-tec-business.net**, click first on the reference and then on the material code to obtain the data sheet of the material.

10DUM and **10DU** seals can be used in both rod and piston applications thanks to their symmetrical lip design.

With a wide range of dimensions available, **10DUM** and **10DU** piston/rod seals have an efficient price-performance ratio.

d	D	L	H	Reference
80	100	11,5	10	**10DUM 100080**
	105	13,5	12	**10DUM 105080**
	110	16,5	15	**10DUM 110080**
85	105	11,5	10	**10DUM 105085**
	110	13,5	12	**10DUM 110085**
	115	16,5	15	**10DUM 115085**
90	110	11,5	10	**10DUM 110090**
	120	16,5	15	**10DUM 120090**
95	115	11,5	10	**10DUM 115095**
	125	16,5	15	**10DUM 125095**
100	120	11,5	10	**10DUM 120100**
	125	13,5	12	**10DUM 125100**
	130	16,5	15	**10DUM 130100**
110	135	13,5	12	**10DUM 135110**
	140	16,5	15	**10DUM 140110**
115	145	13,5	12	**10DUM 145115**
120	140	11,5	10	**10DUM 140120**
	150	16,5	15	**10DUM 150120**
125	150	19,5	18	**10DUM 150125**
	155	16,5	15	**10DUM 155125**
130	160	16,5	15	**10DUM 160130**
135	160	19,5	18	**10DUM 160135**
140	165	19,5	18	**10DUM 165140**
	170	16,5	15	**10DUM 170140**
145	175	16,5	15	**10DUM 175145**
150	180	16,5	15	**10DUM 180150**
160	190	16,5	15	**10DUM 190160**
	200	21,5	20	**10DUM 200160**
170	200	16,5	15	**10DUM 200170**
	210	21,5	20	**10DUM 210170**

For special requirements (fluid, temperature, pressure, speed...) or applications approaching maximum values, please contact us. Other materials available: **FPM**, **HNBR**, **TNBR**, **EPDM**...

d	D	L	H	Reference
180	210	23,5	22	**10DUM 210180**
	220	21,5	20	**10DUM 220180**
190	220	16,5	15	**10DUM 220190**
195	225	16,5	15	**10DUM 225195**
200	230	16,5	15	**10DUM 230200**
	240	21,5	20	**10DUM 240200**
210	250	21,5	20	**10DUM 250210**
220	260	21,5	20	**10DUM 260220**
230	270	21,5	20	**10DUM 270230**
240	280	21,5	20	**10DUM 280240**
250	290	21,5	20	**10DUM 290250**
260	300	21,5	20	**10DUM 300260**
280	320	21,5	20	**10DUM 320280**
300	340	21,5	20	**10DUM 340300**
310	350	21,5	20	**10DUM 350310**
320	350	23,5	22	**10DUM 350320**
	360	21,5	20	**10DUM 360320**
340	380	21,5	20	**10DUM 380340**
350	400	26,5	25	**10DUM 400350**
400	450	26,5	25	**10DUM 450400**
450	500	26,5	25	**10DUM 500450**

Inch dimensions

d	D	L	H	Reference
4,76	9,52	4	2,38	**10DU 037018**
6,35	11,11	4,5	3,17	**10DU 043025**
7,93	14,28	4,5	3,17	**10DU 056031**
9,52	15,87	4,5	3,17	**10DU 062037**
11,11	19,05	6,5	4,76	**10DU 075043**
15,87	25,4	8	6,35	**10DU 100062**
19,05	31,75	8	6,35	**10DU 125075**
20,63	36,51	11	9,52	**10DU 143081**
26,99	46,04	11	9,52	**10DU 181106**
38,1	55,56	8	6,35	**10DU 218150**
60,33	79,38	11	9,52	**10DU 312237**
77,79	101,6	14,5	12,7	**10DU 400306**
92,08	111,12	11	9,52	**10DU 437362**
127	152,4	14,5	12,7	**10DU 600500**
133,35	158,8	14,5	12,7	**10DU 625525**

10DUM and 10DU seals with diameters between 20 and 1500 mm can be manufactured within short delivery time.
For prices and availability: **www.all-tec-business.net**

ALL-TEC SEALING SYSTEMS

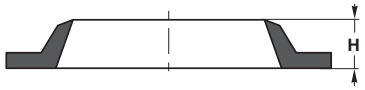

10DH

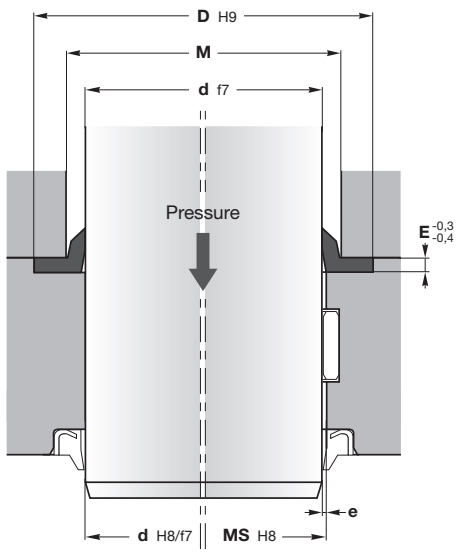

metal guiding | with guide rings

e (mm) ≤ 0,3 - 0,01xP (MPa)

MS = d + 2e

Machining of housings: see pages 48-49

10DH hat seal is usually fixed in housings with clamp flange.

This seal is mainly used for replacement in old hydraulic and pneumatic cylinders or for secondary applications.

Operating conditions	**see page 8**
Pressure	≤ 4 MPa
Temperature	-30°C to 100°C
Speed	≤ 0,5 m/s
Fluids	**see pages 22-45**

Materials	**see pages 10-19**
	NBR 90 Sh A

Assembly	**see pages 54-59**
In open grooves	

Advantages

Low friction

Unaffected by deflections of the rod

Please contact us for applications approaching maximum values.

More information

On **www.all-tec-business.net**, click first on the reference and then on the material code to obtain the data sheet of the material.

d	D	H	E	M	Reference
4,76	11,11	3,17	1,58	7,54	**10DH 018**
6,35	15,87	4,76	2,38	11,11	**10DH 025**
12,7	25,4	6,35	3,17	18,25	**10DH 050**
19,05	38,1	9,52	3,17	27,78	**10DH 075**
20,6	34,9	6,35	3,17	28,58	**10DH 081**
23,81	45,24	12,7	4,76	33,34	**10DH 093**
25,4	44,45	9,52	3,17	34,93	**10DH 100**
31,75	74,61	12,7	5,08	41,28	**10DH 125**
34,9	55,1	7,9	3,17	41,28	**10DH 137**
38,1	69,85	10,31	3,17	47,63	**10DH 150**
44,45	69,85	11,11	4,76	53,98	**10DH 175**
50,8	69,85	6,35	3,17	57,15	**10DH 200**
53,98	76,2	9,52	3,17	63,5	**10DH 212**
57,15	82,55	9,52	3,17	66,68	**10DH 225**
63,5	79,38	9,52	3,17	69,85	**10DH 250**
69,85	95,25	9,52	3,17	79,38	**10DH 275**
76,2	114,3	15,87	4,76	85,73	**10DH 300**
82,55	107,95	9,52	3,17	92,08	**10DH 325**
88,9	133,35	12,7	4,76	98,43	**10DH 350**
95,25	123,8	11,9	4,76	104,8	**10DH 375**
101,6	127	12,7	3,17	111,1	**10DH 400**
107,95	146,05	15,87	4,56	117,5	**10DH 425**
114,3	134,9	12,7	5,33	123,8	**10DH 450**
120,7	149,2	12,7	4,76	130,2	**10DH 475**
127	152,4	15,87	6,35	136,5	**10DH 500**

For special requirements (fluid, temperature, pressure, speed...) or applications approaching maximum values, please contact us. Other materials available: **FPM**, **HNBR**, **TNBR**, **EPDM**...

10DH seals with diameters between 20 and 1500 mm can be manufactured within short delivery time.
For prices and availability: **www.all-tec-business.net**

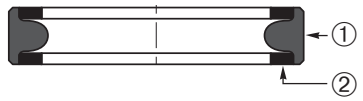

10TRO

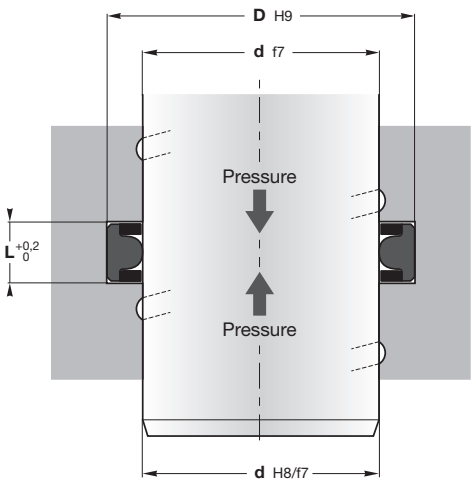

Machining of housings: see pages 48-49

10TRO rod T-seal combines a resilient sealing ring with a hard split back-up ring on each side of the sealing element.

Its compact design provides improved stability and extrusion resistance in dynamic fluid sealing applications. The flange or base of the T-seal forms a tight seal in the gland and supports the anti-extrusion back-up rings.

Rod T-seal **eliminates** the spiral or twisting failure that can occur when O-rings are used against a dynamic surface.

Operating conditions	**see page 8**
Pressure	≤ 35 MPa
Temperature	-35°C to 100°C
Speed	≤ 0,5 m/s
Fluids	**see pages 22-45**

Materials	**see pages 10-19**
Seal ①	NBR 70 Sh A
Anti-extrusion ring ②	POM

Assembly	**see pages 54-59**
In closed grooves	

Advantages

- Small section
- Low friction
- High extrusion resistance
- Easy to fit
- Double acting

Please contact us for applications approaching maximum values.

More information

On **www.all-tec-business.net**, click first on the reference and then on the material code to obtain the data sheet of the different materials.

d	D	L	Reference
14,29	20,4	4,7	**10TRO 0563**
15,88	22	4,7	**10TRO 0625**
17,46	23,57	4,7	**10TRO 0688**
19,05	25,15	4,7	**10TRO 0750**
22,23	28,32	4,7	**10TRO 0875**
25,4	31,5	4,7	**10TRO 1000**
31,75	37,85	4,7	**10TRO 1250**
34,93	41,02	4,7	**10TRO 1375**
38,1	44,2	4,7	**10TRO 1500**
38,1	47,47	7,11	**10TRO 1500/1**
41,28	50,65	7,11	**10TRO 1625**
44,45	53,82	7,11	**10TRO 1750**
47,62	57	7,11	**10TRO 1875**
50,8	60,17	7,11	**10TRO 2000**
57,15	66,52	7,11	**10TRO 2250**
63,5	72,87	7,11	**10TRO 2500**
69,85	79,22	7,11	**10TRO 2750**
76,2	85,52	7,11	**10TRO 3000**
88,9	98,22	7,11	**10TRO 3500**
101,6	110,92	7,11	**10TRO 4000**
111,13	120,45	7,11	**10TRO 4375**

For special requirements (fluid, temperature, pressure, speed...) or applications approaching maximum values, please contact us. Other materials available: **FPM**, **HNBR**, **TNBR**, **EPDM**...

10TRO seals with diameters between 20 and 1500 mm can be manufactured within short delivery time.
For prices and availability: **www.all-tec-business.net**

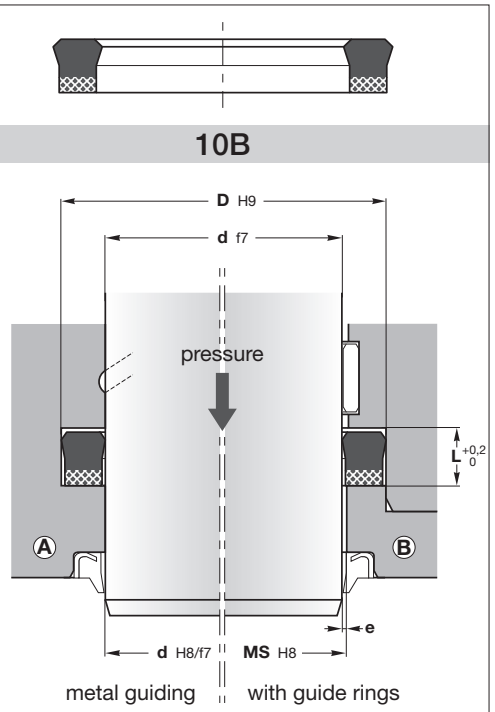

MS = d + 2e

Machining of housings: see pages 48-49

Pressure (MPa)	e (mm)
16	≤ 0,2
25	≤ 0,1

10B is produced in a compact design which guarantees good functioning at low pressures. **10B** has a symmetrical design that allows application as a piston and rod seal.

The resistance to extrusion is obtained by the fabric reinforcement on the opposite side from the pressure.

Operating conditions	**see page 8**
Pressure	≤ 25 MPa
Temperature	-30°C to 130°C
Speed	≤ 0,5 m/s
Fluids	**see pages 22-45**

Materials	**see pages 10-19**
	NBR with cotton fabric

Assembly	**see pages 54-59**
In closed grooves Ⓐ	
In open grooves Ⓑ	

Advantages

- Efficient sealing at low pressure
- Easy to fit
- Large size range
- Small cross sections
- Good chemical resistance
- Wide temperature range

Please contact us for applications approaching maximum values.

More information

On **www.all-tec-business.net**, click first on the reference and then on the material code to obtain the data sheet of the material.

For special requirements (fluid, temperature, pressure, speed...) or applications approaching maximum values, please contact us. Other materials available: **FPM**, **HNBR**, **TNBR**...

d	D	L	ISO 5597	Alternative reference	Reference
6,35	14,28	6,85			**10B 056025**
12	19	6,4			**10B 075047**
12,7	19,05	5,25			**10B 075050**
	22,22	7,65			**10B 087050**
14	22	6,4	●		**10B 086055**
15	23	6,4		15BE 1523	**10B 090059**
15,87	22,22	5,25			**10B 087062**
	25,4	7,65			**10B 100062**
	28,57	10			**10B 112062**
16	24	6,4	●	15BE 1624/1	**10B 094063/1**
	24	7			**10B 094063**
17,46	30,16	10			**10B 118068**
18	24	5,2			**10B 094070**
	25	8			**10B 098070**
	26	6,4		15BE 1826/1	**10B 102070/1**
	26	7			**10B 102070**
19,05	31,75	8,5			**10B 125075/1**
	31,75	9,52			**10B 125075/2**
20	27	6,4		15BE 2027	**10B 106078**
	28	6,4	●	15BE 2028/1	**10B 110078/1**
	28	7		15BE 2028	**10B 110078**
22	30	6,4	●		**10B 118086/1**
	30	7		15BE 2230	**10B 118086**
	35	10			**10B 137086**
22,22	31,75	9,2			**10B 125087**
25	33	6,4	●	15BE 2533/1	**10B 129098/1**
	35	9		15BE 2535	**10B 137098**
	38	10			**10B 149098**
	44	12,5			**10B 173098**
25,4	34,92	6,85			**10B 137100**
	38,1	10			**10B 150100**
27	35	6,5			**10B 137106**
28	36	6,4	●	15BE 2836	**10B 141110**

d	D	L	ISO 5597	Alternative reference	Reference
28,57	41,27	10			**10B 162112**
	44,45	11,6			**10B 175112**
30	37,5	6,5			**10B 147118**
	40	7,5		15BE 3040	**10B 157118**
	45	9			**10B 177118/1**
	50	14,5			**10B 196118**
31,75	44,45	9,52			**10B 175125**
	47,62	11,6			**10B 187125**
32	40	6,4		15BE 3240/1	**10B 157125/1**
	40	9			**10B 157125**
34,92	50,8	10			**10B 200137/1**
	50,8	11,6			**10B 200137/2**
35	43	6,5		15BE 3543	**10B 169137**
	45	8		15BE 3545/5	**10B 177137/5**
	50	11,5			**10B 196137**
36	43	6,5			**10B 169141**
37,72	50,8	9			**10B 200148**
38	50	9,5		15BE 3850	**10B 196149**
38,1	50,8	12,4			**10B 200150/1**
	53,97	11,5			**10B 212150/1**
	53,97	12,83			**10B 212150/2**
40	48	6,5		15BE 4048	**10B 188157**
	50	8	●	15BE 4050/3	**10B 196157/3**
	50	11			**10B 196157**
	50	13,5			**10B 196157/2**
	60	14,5			**10B 236157**
41,27	57,15	11,6			**10B 225162**
42	50	6,4		15BE 4250	**10B 196165**
44,45	61,91	11,6			**10B 243175**
45	53	6,5		15BE 4553	**10B 208177**
	55	8	●	15BE 4555	**10B 216177**
	63	11		15BE 4563	**10B 248177**
	65	14,5			**10B 255177**
47,62	63,5	11,5			**10B 250187**

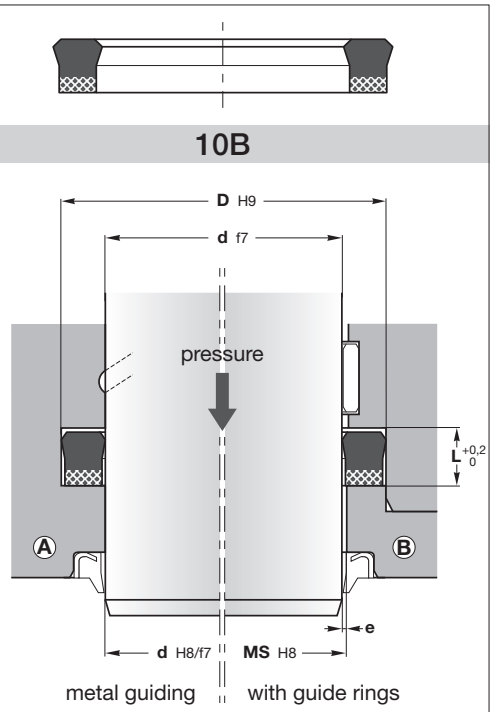

MS = d + 2e

Machining of housings: see pages 48-49

Pressure (MPa)	e (mm)
16	≤ 0,2
25	≤ 0,1

10B is produced in a compact design which guarantees good functioning at low pressures. **10B** has a symmetrical design that allows application as a piston and rod seal.

The resistance to extrusion is obtained by the fabric reinforcement on the opposite side from the pressure.

Operating conditions	see page 8
Pressure	≤ 25 MPa
Temperature	-30°C to 130°C
Speed	≤ 0,5 m/s
Fluids	see pages 22-45

Materials	see pages 10-19
	NBR with cotton fabric

Assembly	see pages 54-59
In closed grooves Ⓐ	
In open grooves Ⓑ	

Advantages

- Efficient sealing at low pressure
- Easy to fit
- Large size range
- Small cross sections
- Good chemical resistance
- Wide temperature range

Please contact us for applications approaching maximum values.

More information

On **www.all-tec-business.net**, click first on the reference and then on the material code to obtain the data sheet of the material.

For special requirements (fluid, temperature, pressure, speed...) or applications approaching maximum values, please contact us. Other materials available: **FPM**, **HNBR**, **TNBR**...

d	D	L	ISO 5597	Alternative reference	Reference
50	58	8,5			**10B 228196/1**
	60	8	●	15BE 5060	**10B 236196**
	60	10			**10B 236196/1**
	62	9,5			**10B 244196/1**
	70	14,5			**10B 275196**
50,8	63,5	10			**10B 250200/1**
	66,67	11,5		15BE 5066	**10B 262200**
53,97	73,02	14,8			**10B 287212**
55	65	8		15BE 5565/1	**10B 255216/1**
	70	10,5			**10B 275216**
	75	14,5			**10B 295216**
56	66	8		15BE 5666	**10B 259220**
57,15	69,85	10			**10B 275225**
	73,02	11,5			**10B 287225**
	76,2	10			**10B 300225**
	76,2	13,5			**10B 300225/1**
	76,2	14,28			**10B 300225/2**
60	70	8		15BE 6070	**10B 275236**
	72	10		15BE 6072	**10B 283236**
	80	14,5		15BE 6080	**10B 314236**
61	69	8,5			**10B 271240**
63	75	9,6			**10B 295248/1**
63,5	82,55	14,28			**10B 325250/1**
65	75	8,5		15BE 6575/1	**10B 295255/1**
	80	11,5			**10B 314255**
	85	14,5			**10B 334255**
70	80	8		15BE 7080/1	**10B 314275/1**
	82	9,6		15BE 7082/1	**10B 322275/1**
	85	12			**10B 334275/1**
	90	14,5			**10B 354275**
73,02	88,9	12,5			**10B 350287**
75	85	8		15BE 7585/1	**10B 334295/1**
	90	11,5			**10B 354295**
76	84	8,5			**10B 330299**

d	D	L	ISO 5597	Alternative reference	Reference
76,2	92,07	10			**10B 362300**
	95,25	14,8			**10B 375300**
80	90	8		15BE 8090	**10B 354314**
	92	9,6		15BE 8092	**10B 362314**
	96	10,5			**10B 377314**
	100	14,5			**10B 393314**
81	91	8			**10B 358318**
82,55	101,6	14,8			**10B 400325/1**
85	95	8			**10B 374334**
	100	12			**10B 393334/1**
85,72	104,77	14,8			**10B 412337**
88,9	101,6	10			**10B 400350**
	107,95	12,7			**10B 425350**
90	102	9,6		15BE 90102	**10B 401354**
95,25	114,3	13,5			**10B 450375**
	120,65	19,5			**10B 475375**
100	115	11,5			**10B 452393/1**
	120	14,5			**10B 472393**
101,6	127	19,5			**10B 500400**
105	125	12,5			**10B 492413**
110	125	12			**10B 492433**
114,3	139,7	19,5			**10B 550450**
120	140	12,5			**10B 551472**
125	140	12		15BE 125140	**10B 551492**
127	152,4	19,5			**10B 600500**
139,7	165,1	19,5			**10B 650550**
152,4	177,8	19,5			**10B 700600**
165,1	196,85	25,8			**10B 775650**
280	320	22,5			**10B 12591102**
320	360	25,5			**10B 14171259**

For prices and availability: **www.all-tec-business.net**

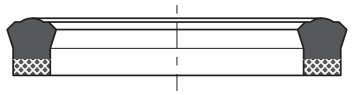

10B.../M

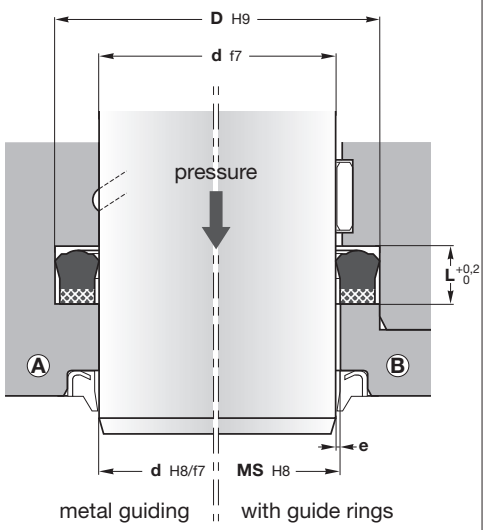

MS = d + 2e

Machining of housings: see pages 48-49

Pressure (MPa)	**e** (mm)
16	≤ 0,2
25	≤ 0,1

The rod seal of the **10B.../M** series is a compact groove ring for the sealing of piston rods and plungers.

The seal is made of NBR fabric with an elastomer element integrated by vulcanization. The fabric reinforcement protects the seals against gap extrusion. Its fine surface structure forms small repositories to store lubricant. The constructive layout of the seal profile results in secure sealing in the low pressure range already.

Operating conditions	**see page 8**
Pressure	≤ 25 MPa
Temperature	-30°C to 110°C
Speed	≤ 0,5 m/s
Fluids	**see pages 22-45**

Materials	**see pages 10-19**
	NBR with cotton fabric

Assembly	**see pages 54-59**
In closed grooves Ⓐ	
In open grooves Ⓑ	

Advantages

- Efficient sealing at low pressure
- Easy to fit
- Small cross sections
- Good chemical resistance

Please contact us for applications approaching maximum values.

More information

On **www.all-tec-business.net**, click first on the reference and then on the material code to obtain the data sheet of the material.

d	D	L	ISO 5597	Reference
5	12	6,4		**10B 047019/M**
6	13	6,4		**10B 051024/M**
8	15	6,4		**10B 059031/M**
10	17	6,4		**10B 066039/M**
12	19	6,4		**10B 075047/M**
14	22	6,4		**10B 086055/M**
15	23	6,4		**10B 090059/M**
16	24	6,4	●	**10B 094063/1/M**
18	26	6,4	●	**10B 102070/1/M**
20	28	6,4	●	**10B 110078/1/M**
22	30	6,4	●	**10B 118086/1/M**
25	33	6,4		**10B 129098/1/M**
28	36	6,4	●	**10B 141110/M**
30	38	6,4	●	**10B 149118/M**
32	40	6,4	●	**10B 157125/1/M**
35	43	6,4		**10B 169137/M**
36	44	6,4	●	**10B 173141/M**
40	48	6,4	●	**10B 188157/M**
42	50	6,4		**10B 196165/M**
45	55	8	●	**10B 216177/M**
50	60	8	●	**10B 236196/M**

d	D	L	ISO 5597	Reference
55	65	8		**10B 255216/1/M**
56	66	8		**10B 259220/M**
60	70	8		**10B 275236/M**
63	75	9,6		**10B 295248/1/M**
65	77	9,6		**10B 303255/M**
70	82	9,6		**10B 322275/1/M**
75	87	9,6		**10B 342295/M**
80	92	9,6		**10B 362314/M**
85	97	9,6		**10B 381334/M**
90	102	9,6		**10B 401354/M**
100	115	12		**10B 452393/2/M**
110	125	12		**10B 492433/M**
115	130	12		**10B 511452/M**
125	140	12		**10B 551492/M**
140	160	16	●	**10B 629551/2/M**
150	170	16		**10B 669590/M**
160	180	16		**10B 708629/1/M**
180	200	16		**10B 787708/1/M**
200	220	16		**10B 866787/1/M**

For special requirements (fluid, temperature, pressure, speed...) or applications approaching maximum values, please contact us. Other materials available: **FPM**, **HNBR**, **TNBR**...

Seals with diameters between 20 and 1500 mm can be manufactured within short delivery time.
For prices and availability: **www.all-tec-business.net**

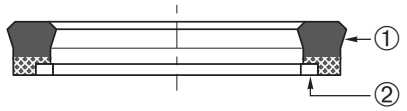

10B.../NEI

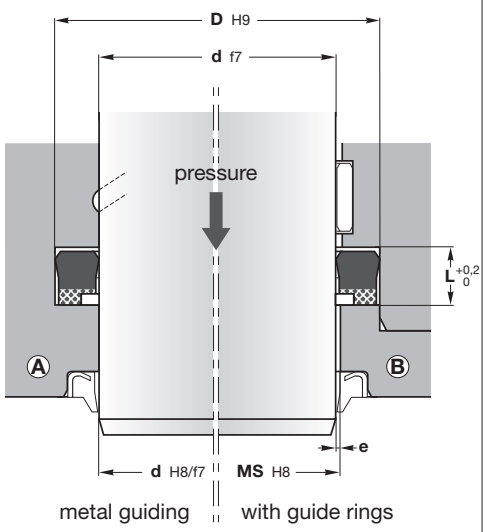

MS = d + 2e

Machining of housings: see pages 48-49

Pressure (MPa)	e (mm)
16	≤ 0,4
25	≤ 0,2
40	≤ 0,1

10B.../NEI rod seals are made up of NBR impregnated on cotton fabric which is initially prepared and moulded with NBR material. They are especially designed for rod applications. POM back-up ring provides a high rate of extrusion resistance.

10B.../NEI rod seals with inner dimension smaller than 20 mm are recommended to be mounted in open grooves.

Operating conditions	**see page 8**
Pressure	≤ 40 MPa
Temperature	-30°C to 110°C
Speed	≤ 0,5 m/s
Fluids	**see pages 22-45**

Materials	**see pages 10-19**
Seal ①	NBR with cotton fabric
Anti-extrusion ring ②	Acetal resin (POM)

Assembly	**see pages 54-59**
In closed grooves Ⓐ	
In open grooves Ⓑ	

Advantages

- Efficient sealing at low pressure
- Easy to fit
- Large size range
- Small cross sections
- Good chemical resistance
- Wide temperature range
- The integrated anti-extrusion ring prevents the seal material from extrusion at higher pressure

Please contact us for applications approaching maximum values.

More information

On **www.all-tec-business.net**, click first on the reference and then on the material code to obtain the data sheet of the different materials.

For special requirements (fluid, temperature, pressure, speed...) or applications approaching maximum values, please contact us. Other materials available: **FPM**, **HNBR**, **TNBR**...

d	D	L	ISO 5597	Alternative reference	Reference
12	23	7,5			**10B 090047/NEI**
16	28	7,5			**10B 110062/NEI**
18	30	7,5			**10B 118070/NEI**
20	27	6,5			**10B 106078/NEI**
	28	6,4	●		**10B 110078/1/NEI**
	28	7			**10B 110078/NEI**
	30	8,5			**10B 118078/NEI**
22	30	7			**10B 118086/NEI**
	32	10			**10B 125086/NEI**
	34	9,5			**10B 133086/NEI**
25	33	6,4	●	15BE 2533/1/NEI	**10B 129098/1/NEI**
	35	9			**10B 137098/NEI**
	38	10		15BE 2538/NEI	**10B 149098/NEI**
25,4	38,1	10			**10B 150100/NEI**
28	36	6,4	●	15BE 2836/NEI	**10B 141110/NEI**
	38	8	●	15BE 2838/1/NEI	**10B 149110/1/NEI**
	40	9,5			**10B 157110/NEI**
28,57	39,68	9,25			**10B 156112/NEI**
30	38	6,4		15BE 3038/NEI	**10B 149118/NEI**
	40	7,5			**10B 157118/NEI**
	40	10,5			**10B 157118/1/NEI**
	45	9			**10B 177118/1/NEI**
32	40	6,4	●	15BE 3240/1/NEI	**10B 157125/1/NEI**
	40	9		15BE 3240/NEI	**10B 157125/NEI**
	45	10		15BE 3245/NEI	**10B 177125/NEI**
34,92	50,8	8,5			**10B 200137/4/NEI**
35	43	6,4			**10B 169137/NEI**
	45	10,5			**10B 177137/3/NEI**
	50	11,5			**10B 196137/NEI**
36	44	6,4	●		**10B 173141/NEI**
	46	8,5		15BE 3646/NEI	**10B 181141/NEI**
	48	9,5		15BE 3648/NEI	**10B 188141/NEI**
	48	12			**10B 188141/1/NEI**
38,1	50,8	10			**10B 200150/NEI**
	53,97	10,5			**10B 212150/5/NEI**

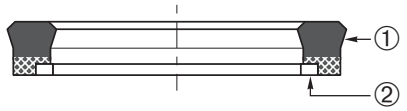

10B.../NEI

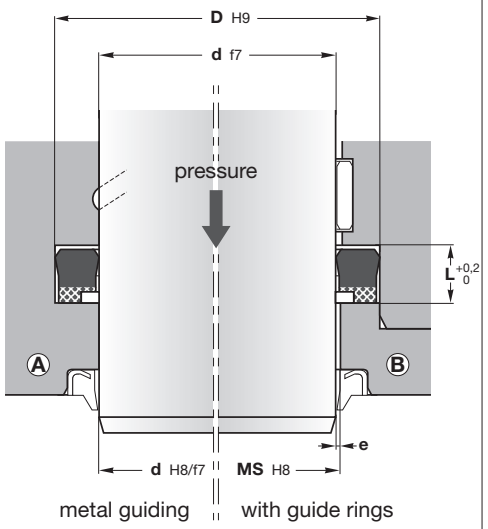

MS = d + 2e

Machining of housings: see pages 48-49

Pressure (MPa)	e (mm)
16	≤ 0,4
25	≤ 0,2
40	≤ 0,1

10B.../NEI rod seals are made up of NBR impregnated on cotton fabric which is initially prepared and moulded with NBR material. They are especially designed for rod applications. POM back-up ring provides a high rate of extrusion resistance.

10B.../NEI rod seals with inner dimension smaller than 20 mm are recommended to be mounted in open grooves.

Operating conditions	see page 8
Pressure	≤ 40 MPa
Temperature	-30°C to 110°C
Speed	≤ 0,5 m/s
Fluids	see pages 22-45

Materials	see pages 10-19
Seal ①	NBR with cotton fabric
Anti-extrusion ring ②	Acetal resin (POM)

Assembly	see pages 54-59
In closed grooves Ⓐ	
In open grooves Ⓑ	

Advantages

- Efficient sealing at low pressure
- Easy to fit
- Large size range
- Small cross sections
- Good chemical resistance
- Wide temperature range
- The integrated anti-extrusion ring prevents the seal material from extrusion at higher pressure

Please contact us for applications approaching maximum values.

More information

On **www.all-tec-business.net**, click first on the reference and then on the material code to obtain the data sheet of the different materials.

d	D	L	ISO 5597	Alternative reference	Reference
40	48	6,5		15BE 4048/NEI	10B 188157/NEI
	50	8	●		10B 196157/3/NEI
	50	10,5			10B 196157/1/NEI
	50	11		15BE 4050/NEI	10B 196157/NEI
	55	8		15BE 4055/NEI	10B 216157/NEI
	55	11			10B 216157/1/NEI
42	52	9			10B 204165/NEI
44,45	53,97	7,62			10B 212175/1/NEI
	60,32	11,6			10B 237175/NEI
45	55	8	●	15BE 4555/NEI	10B 216177/NEI
	55	11		15BE 4555/1/NEI	10B 216177/1/NEI
	57	10			10B 224177/NEI
	60	10,5			10B 236177/NEI
	65	14,5			10B 255177/NEI
50	60	8	●	15BE 5060/NEI	10B 236196/NEI
	60	10		15BE 5060/1/NEI	10B 236196/1/NEI
	62	9,5		15BE 5062/1/NEI	10B 244196/1/NEI
	65	11		15BE 5065/NEI	10B 255196/NEI
	70	14,5		15BE 5070/NEI	10B 275196/NEI
55	65	8		15BE 5565/1/NEI	10B 255216/1/NEI
	65	11		15BE 5565/NEI	10B 255216/NEI
	70	10,5		15BE 5570/NEI	10B 275216/NEI
56	71	10,5		15BE 5671/NEI	10B 279220/NEI
	71	12,5	●		10B 279220/1/NEI
	76	14,5			10B 299220/NEI
57,15	69,85	10			10B 275225/NEI
60	69,5	7			10B 273236/NEI
	70	8		15BE 6070/NEI	10B 275236/NEI
	70	11			10B 275236/1/NEI
	70	13		15BE 6070/2/NEI	10B 275236/2/NEI
	72	10		15BE 6072/NEI	10B 283236/NEI
	75	13		15BE 6075/NEI	10B 295236/NEI
	80	14,5			10B 314236/NEI
63	75	11			10B 295248/NEI
	78	12,5	●		10B 307248/NEI
	83	14,5			10B 326248/NEI

For special requirements (fluid, temperature, pressure, speed...) or applications approaching maximum values, please contact us. Other materials available: **FPM**, **HNBR**, **TNBR**...

For prices and availability: **www.all-tec-business.net**

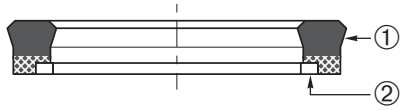

10B.../NEI

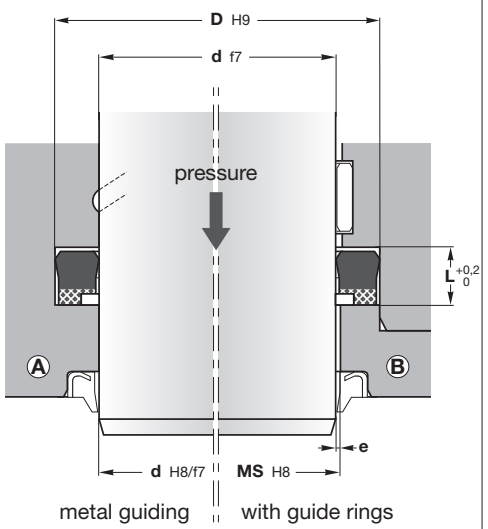

MS = d + 2e

Machining of housings: see pages 48-49

Pressure (MPa)	e (mm)
16	≤ 0,4
25	≤ 0,2
40	≤ 0,1

10B.../NEI rod seals are made up of NBR impregnated on cotton fabric which is initially prepared and moulded with NBR material. They are especially designed for rod applications. POM back-up ring provides a high rate of extrusion resistance.

10B.../NEI rod seals with inner dimension smaller than 20 mm are recommended to be mounted in open grooves.

Operating conditions	**see page 8**
Pressure	≤ 40 MPa
Temperature	-30°C to 110°C
Speed	≤ 0,5 m/s
Fluids	**see pages 22-45**

Materials	**see pages 10-19**
Seal ①	NBR with cotton fabric
Anti-extrusion ring ②	Acetal resin (POM)

Assembly	**see pages 54-59**
In closed grooves Ⓐ	
In open grooves Ⓑ	

Advantages

- Efficient sealing at low pressure
- Easy to fit
- Large size range
- Small cross sections
- Good chemical resistance
- Wide temperature range
- The integrated anti-extrusion ring prevents the seal material from extrusion at higher pressure

Please contact us for applications approaching maximum values.

More information

On **www.all-tec-business.net**, click first on the reference and then on the material code to obtain the data sheet of the different materials.

For special requirements (fluid, temperature, pressure, speed...) or applications approaching maximum values, please contact us. Other materials available: **FPM**, **HNBR**, **TNBR**...

d	D	L	ISO 5597	Alternative reference	Reference
65	75	13,5			**10B 295255/NEI**
	77	9,6			**10B 303255/NEI**
	80	11,5		**15BE 6580/NEI**	**10B 314255/NEI**
70	80	8		**15BE 7080/1/NEI**	**10B 314275/1/NEI**
	80	13		**15BE 7080/NEI**	**10B 314275/NEI**
	82	10,5			**10B 322275/NEI**
	84	12,5		**15BE 7084/NEI**	**10B 330275/NEI**
	85	12		**15BE 7085/1/NEI**	**10B 334275/1/NEI**
	85	12,5	●		**10B 334275/NEI**
75	90	11,5			**10B 354295/NEI**
	95	14,5			**10B 374295/NEI**
80	93	14,5			**10B 366314/NEI**
	95	12			**10B 374314/NEI**
	96	10,5		**15BE 8096/NEI**	**10B 377314/NEI**
	100	12		**15BE 80100/1/NEI**	**10B 393314/1/NEI**
	100	14,5		**15BE 80100/NEI**	**10B 393314/NEI**
85	100	12		**15BE 85100/1/NEI**	**10B 393334/1/NEI**
90	100	11		**15BE 90100/NEI**	**10B 393354/NEI**
	105	9,5		**15BE 90105/NEI**	**10B 413354/NEI**
	105	12,5	●	**15BE 90105/1/NEI**	**10B 413354/1/NEI**
	106,2	10,8			**10B 418354/NEI**
	110	12,5		**15BE 90110/NEI**	**10B 433354/NEI**
95	107	12,5			**10B 421374/NEI**
	110	12,5			**10B 433374/NEI**
	112	12			**10B 441374/NEI**
	115	14,5			**10B 452374/NEI**
100	113	13,5			**10B 444393/NEI**
	115	11,5		**15BE 100115/1/NEI**	**10B 452393/1/NEI**
	120	12			**10B 472393/1/NEI**
	120	14,5		**15BE 100120/NEI**	**10B 472393/NEI**
105	115	11			**10B 452413/NEI**
110	125	12		**15BE 110125/NEI**	**10B 492433/NEI**
	130	12,5			**10B 511433/NEI**
	135	15,5			**10B 531433/NEI**
120	132,7	10			**10B 522472/NEI**
	135	12,5			**10B 531472/NEI**
	140	12,5		**15BE 120140/NEI**	**10B 551472/NEI**

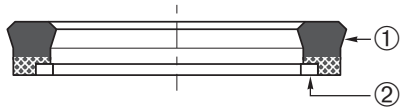

10B.../NEI

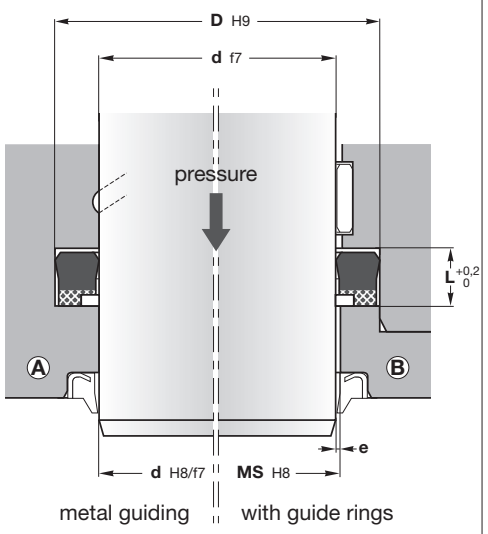

MS = d + 2e

Machining of housings: see pages 48-49

Pressure (MPa)	e (mm)
16	≤ 0,4
25	≤ 0,2
40	≤ 0,1

10B.../NEI rod seals are made up of NBR impregnated on cotton fabric which is initially prepared and moulded with NBR material. They are especially designed for rod applications. POM back-up ring provides a high rate of extrusion resistance.

10B.../NEI rod seals with inner dimension smaller than 20 mm are recommended to be mounted in open grooves.

Operating conditions	**see page 8**
Pressure	≤ 40 MPa
Temperature	-30°C to 110°C
Speed	≤ 0,5 m/s
Fluids	**see pages 22-45**

Materials	**see pages 10-19**
Seal ①	NBR with cotton fabric
Anti-extrusion ring ②	Acetal resin (POM)

Assembly	**see pages 54-59**
In closed grooves Ⓐ	
In open grooves Ⓑ	

Advantages

- Efficient sealing at low pressure
- Easy to fit
- Large size range
- Small cross sections
- Good chemical resistance
- Wide temperature range
- The integrated anti-extrusion ring prevents the seal material from extrusion at higher pressure

Please contact us for applications approaching maximum values.

More information

On **www.all-tec-business.net**, click first on the reference and then on the material code to obtain the data sheet of the different materials.

For special requirements (fluid, temperature, pressure, speed...) or applications approaching maximum values, please contact us. Other materials available: **FPM**, **HNBR**, **TNBR**...

d	D	L	ISO 5597	Alternative reference	Reference
125	150	14,5			**10B 590492/NEI**
130	145	13			**10B 570511/1/NEI**
	145	15			**10B 570511/NEI**
	150	16		**15BE 130150/NEI**	**10B 590511/NEI**
	155	18,8			**10B 610511/NEI**
140	155	13			**10B 610551/NEI**
	160	12,5			**10B 629551/NEI**
	160	14,5			**10B 629551/1/NEI**
145	157,7	10			**10B 620570/NEI**
150	170	14,5		**15BE 150170/1/NEI**	**10B 669590/1/NEI**
160	175	16			**10B 688629/NEI**
	180	14,5		**15BE 160180/NEI**	**10B 708629/NEI**
170	182,7	10			**10B 719669/NEI**
180	200	14,5			**10B 787708/NEI**
190	210	14,5		**15BE 190210/NEI**	**10B 826748/NEI**
200	220	14,5			**10B 866787/NEI**
210	230	14			**10B 905826/NEI**
220	250	20,5			**10B 984866/NEI**

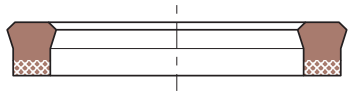

11B...FPM-.

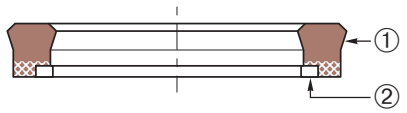

11B.../NEI FPM-.

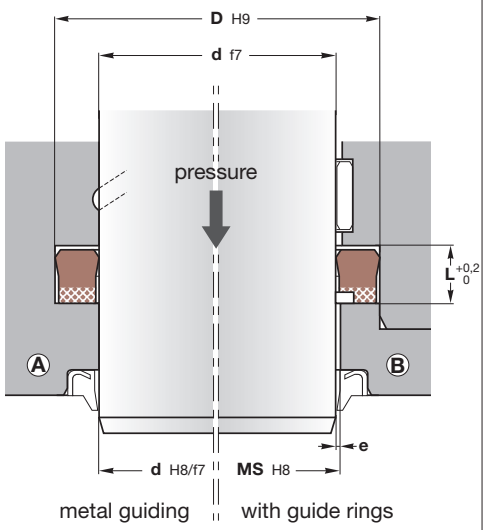

MS = d + 2e

Machining of housings: see pages 48-49

Pressure (MPa)	e (mm)	
	11B...FPM-.	11B.../NEI FPM-.
16	≤ 0,2	≤ 0,4
25	≤ 0,1	≤ 0,2
40		≤ 0,1

11B...FPM rod seals are made up of FPM material impregnated on cotton fabric which is initially prepared and moulded with FPM material.

11B...FPM rod seals with inner dimension smaller than 20 mm are recommended to be mounted in open grooves.

Operating conditions see page 8

Pressure	
11B...FPM-.	≤ 25 MPa
11B.../NEI FPM-.	≤ 40 MPa
Temperature	
11B...FPM-C	-20°C to 150°C
11B...FPM-A	-20°C to 200°C
11B.../NEI FPM-C	-20°C to 150°C
11B.../NEI FPM-A	-20°C to 200°C
Speed	≤ 0,5 m/s
Fluids	see pages 22-45

Materials see pages 10-19

Seal ①	
11B.../NEI FPM-C	FPM with cotton fabric
11B.../NEI FPM-A	FPM with aramid fabric
Anti-extrusion ring ②	
11B.../NEI FPM-C	PTFE with glass (PT15)
11B.../NEI FPM-A	PTFE with glass (PT15)

Assembly see pages 54-59

In closed grooves Ⓐ

In open grooves Ⓑ

Advantages

Efficient sealing at low pressure

Easy to fit

Good chemical resistance

Wide temperature range

The integrated anti-extrusion ring prevents the seal material from extrusion at higher pressure

Please contact us for applications approaching maximum values.

More information

On **www.all-tec-business.net**, click first on the reference and then on the material code to obtain the data sheet of the different materials.

For special requirements (fluid, temperature, pressure, speed...) or applications approaching maximum values, please contact us. Other materials available: **FPM**, **HNBR**, **TNBR**...

d	D	L	Reference
16	24	6,4	**11B 094063/1 FPM-C**
18	26	6,4	**11B 102070/1 FPM-C**
20	28	6,4	**11B 110078/1 FPM-C**
22	30	6,4	**11B 118086/1 FPM-C**
25	33	6,4	**11B 129098/1 FPM-C**
	35	9	**11B 137098 FPM-C**
28	36	6,4	**11B 141110 FPM-C**
30	38	6,4	**11B 149118 FPM-C**
	40	7,5	**11B 157118 FPM-C**
32	40	6,4	**11B 157125/1 FPM-C**
35	43	6,4	**11B 169137 FPM-C**
36	44	6,4	**11B 173141 FPM-C**
40	48	6,4	**11B 188157 FPM-C**
	50	11	**11B 196157 FPM-C**
45	55	8	**11B 216177 FPM-C**
50	60	8	**11B 236196 FPM-C**
	60	10	**11B 236196/1 FPM-C**
55	65	8	**11B 255216/1 FPM-C**
60	70	8	**11B 275236 FPM-C**
	72	10	**11B 283236 FPM-C**
	75	13	**11B 295236/NEI FPM-C**
	80	14,5	**11B 314236/NEI FPM-C**
70	82	9,6	**11B 322275/1 FPM-C**
	85	12,5	**11B 334275/NEI FPM-C**
80	92	9,6	**11B 362314 FPM-C**
	95	12,5	**11B 374314/1/NEI FPM-C**
90	102	9,6	**11B 401354 FPM-C**
	105	12,5	**11B 413354/1/NEI FPM-C**
100	115	12,5	**11B 452393/NEI FPM-C**
	120	16	**11B 472393/2/NEI FPM-A**
125	145	16	**11B 570492/NEI FPM-C**

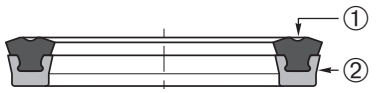

10BLT

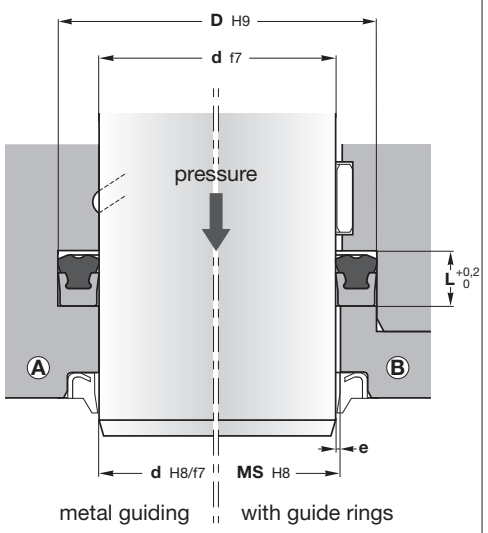

MS = d + 2e

Machining of housings: see pages 48-49

Pressure (MPa)	e (mm)	
	d ≤ 60 mm	**d** > 60 mm
5	≤ 0,4	≤ 0,5
10	≤ 0,3	≤ 0,4
20	≤ 0,2	≤ 0,3
30	≤ 0,15	≤ 0,2
40	≤ 0,1	≤ 0,15

10BLT consists of a primary nitrile rubber sealing ring and a secondary polyurethane sealing ring.

Hybrid rod seals incorporate dynamic sealing lips of different materials. These material combination provides a hybrid seal with the functional benefit of each material and, therefore, a robust rod seal. An example is the sealing ability and resilience of nitrile rubber (NBR) combined with the extrusion and wear resistance of polyurethane (PU).

10BLT profiles combine an NBR primary sealing ring with a PU secondary sealing ring into one seal. This combination provides a good **low temperature resilience** and is suitable for pressures up to 40 MPa in medium to heavy duty applications.

These ALL-TEC hybrid rod seals have been proven successful in low temperature applications. The NBR primary lips also provide improved long term sealing performance and a better capability to larger radial deflections.

Operating conditions	**see page 8**
Pressure	≤ 40 MPa
Temperature	-55°C to 100°C
Speed	≤ 1 m/s
Fluids	**see pages 22-45**

Materials	**see pages 10-19**
Seal ①	TNBR 70 Sh A
Anti-extrusion ring ②	PU 95 Sh A

Assembly	**see pages 54-59**
In closed grooves Ⓐ	
In open grooves Ⓑ	

Advantages

- Seal for low temperatures
- Efficient sealing at low pressure
- Low friction
- Suitable for medium to heavy duty applications
- Easy to fit

Please contact us for applications approaching maximum values.

More information

On **www.all-tec-business.net**, click first on the reference and then on the material code to obtain the data sheet of the different materials.

For special requirements (fluid, temperature, pressure, speed...) or applications approaching maximum values, please contact us. Other materials available: **FPM**, **HNBR**, **TNBR**, **EPDM**...

d	D	L	Reference
25	33	7,5	**10BLT 2533**
30	40	10	**10BLT 3040**
35	45	10	**10BLT 3545**
40	50	10	**10BLT 4050**
45	55	10	**10BLT 4555**
50	60	10	**10BLT 5060**
55	65	10	**10BLT 5565**
60	70	10	**10BLT 6070**
65	75	10	**10BLT 6575**
70	80	10	**10BLT 7080**
75	85	10	**10BLT 7585**
80	90	10	**10BLT 8090**
85	100	13,5	**10BLT 85100**
90	105	13	**10BLT 90105**
100	115	13	**10BLT 100115**
105	120	13	**10BLT 105120**

10BLT seals with diameters between 20 and 1500 mm can be manufactured within short delivery time.
For prices and availability: **www.all-tec-business.net**

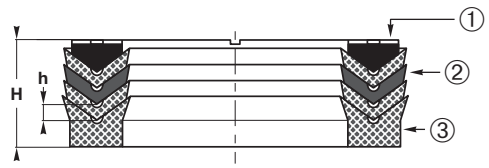

10CH...(1+3+1)

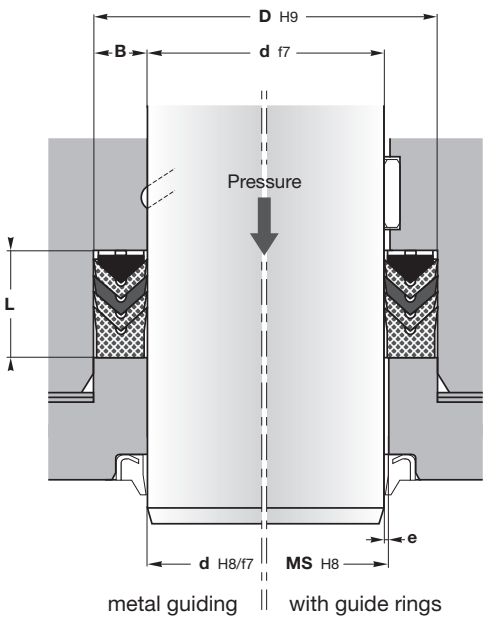

e ≤ 0,15 mm

MS = d + 2e

Machining of housings: see pages 48-49

10CH is a V-pack rod seal for heavy duty applications offering excellent performance and long life even under difficult conditions such as pressure surges, vibration and some misalignment. The seal consists of a male and female adaptor and three V-rings.

The male adapter or **spreader ring** is usually manufactured in POM but some of the larger sizes are rubberised fabric. It has radial grooves to ensure equal pressure to both sealing edges of the V-ring.

All sizes have **V-rings** manufactured from rubberised fabric increasing strength and durability and allowing an oil film **to lubricate the other parts of the seal**. The smaller sizes are supplied with a rubber V-ring between the rubberised fabric V-rings.

The female adaptor or **base ring** uses a hard rubberised fabric to support the V-rings and protect them from extrusion damage. At high pressure the lips of the base ring act as a secondary seal.

Operating conditions — see page 8

Pressure	≤ 40 MPa
Temperature	-30°C to 120°C
Speed	≤ 0,5 m/s
Fluids	**see pages 22-45**

Materials — see pages 10-19

Spreader ring ①	Acetal resin
V-ring ②	generally: 1 x NBR + 2 x NBR-fabric
Base ring ③	NBR-fabric

Assembly — see pages 54-59

In open housings with adjustable length

Advantages

- High operating temperature capability
- Large range of sizes
- For difficult operating conditions: high pressure peaks, bad sliding surfaces, ...
- Adjustable
- Not sensitive to contamination of the medium

Please contact us for applications approaching maximum values.

More information

On **www.all-tec-business.net**, click first on the reference and then on the material code to obtain the data sheet of the different materials.

Calculation of housing length L

Control the length **H**. The housing length **L** must be calculated in accordance to the table below.

B	≤ 6,5	6,6→10	10,1→18	18,1→24,9	≥ 25
L	H+1	H+1,2	H+1,4	H+2	H+2,5

For special requirements (fluid, temperature, pressure, speed...) or applications approaching maximum values, please contact us. Other materials available: **FPM**, **HNBR**, **TNBR**, **EPDM**...

d	D	L	h	Reference
10	20	11	1,7	**10CH 078039/B(1+3+1)**
12	25	14,32	2,56	**10CH 098047/B(1+3+1)**
12,7	25,4	19,05	3,17	**10CH 100050(1+3+1)**
16	29	14,32	2,56	**10CH 114062/B(1+3+1)**
18,25	28,57	16,05	2,64	**10CH 112071(1+3+1)**
20	30	21,5	3,81	**10CH 118078(1+3+1)**
	32	18,2	3,15	**10CH 125078(1+3+1)**
	33	14,32	2,56	**10CH 129078/B(1+3+1)**
	36	24	4,04	**10CH 141078(1+3+1)**
22	32	18,13	2,75	**10CH 125086(1+3+1)**
25	35	17,3	2,82	**10CH 137098(1+3+1)**
	40	19,84	3,5	**10CH 157098(1+3+1)**
	42	25,4	4,29	**10CH 165098(1+3+1)**
	45	25,4	4,5	**10CH 177098(1+3+1)**
25,4	38,1	19,45	3,48	**10CH 150100(1+3+1)**
26	45	29,37	5,16	**10CH 177102(1+3+1)**
28	40	17	2,8	**10CH 157110(1+3+1)**
28,57	41,27	19,84	3,5	**10CH 162112(1+3+1)**
30	40	21,8	3,76	**10CH 157118(1+3+1)**
	42	20	3,45	**10CH 165118(1+3+1)**
	50	29,37	5,08	**10CH 196118(1+3+1)**
31,75	44,45	19,05	3,5	**10CH 175125(1+3+1)**
32	42	17,3	2,82	**10CH 165125(1+3+1)**
	48	17,63	3,17	**10CH 188125/B(1+3+1)**
34,92	50,8	24,21	4,14	**10CH 200137(1+3+1)**
35	45	21,78	3,81	**10CH 177137(1+3+1)**
	50	22,5	3,57	**10CH 196137(1+3+1)**
36	52	17,6	3,17	**10CH 204141/B(1+3+1)**
38	55	28	5,05	**10CH 216149(1+3+1)**

d	D	L	h	Reference
38,1	50,8	19,45	3,51	**10CH 200150(1+3+1)**
	53,97	25,27	4,6	**10CH 212150(1+3+1)**
	53,97	27,78	4,6	**10CH 212150/1(1+3+1)**
	57,15	28,7	3,8	**10CH 225150(1+3+1)**
39	55	25,4	4,65	**10CH 216153(1+3+1)**
40	50	17,3	2,82	**10CH 196157(1+3+1)**
	55	22,62	3,84	**10CH 216157(1+3+1)**
	55	26,19	4,14	**10CH 216157/1(1+3+1)**
	56	17,63	3,17	**10CH 220157/B(1+3+1)**
	60	30	5,16	**10CH 236157(1+3+1)**
	65	35,72	6,15	**10CH 255157(1+3+1)**
44,45	57,15	21,83	3,8	**10CH 225175(1+3+1)**
	60,32	27,8	4,07	**10CH 237175(1+3+1)**
45	55	17,5	2,8	**10CH 216177(1+3+1)**
	60	22,22	3,89	**10CH 236177(1+3+1)**
	65	28	5,34	**10CH 255177(1+3+1)**
48	60	25	4,07	**10CH 236188(1+3+1)**
50	70	21,94	3,95	**10CH 275196/B(1+3+1)**
	70	30	5,16	**10CH 275196(1+3+1)**
50,8	63,5	19,84	3,35	**10CH 250200(1+3+1)**
	66,67	23	4,27	**10CH 262200(1+3+1)**
	66,67	25,27	4,27	**10CH 262200/1(1+3+1)**
	69,85	33,5	5,08	**10CH 275200(1+3+1)**
53,97	63,5	16,67	2,59	**10CH 250212(1+3+1)**
	69,85	25,27	4,07	**10CH 275212(1+3+1)**
55	67	25	4,07	**10CH 263216(1+3+1)**
	70	26,5	4,05	**10CH 275216(1+3+1)**
	75	30	6,48	**10CH 295216(1+3+1)**
	75	38,5	6,48	**10CH 295216/1(1+3+1)**
56	71	17,2	3	**10CH 279220(1+3+1)**
	76	21,95	3,94	**10CH 299220/B(1+3+1)**
	76	33,4	5,38	**10CH 299220(1+3+1)**
57,15	69,85	19,05	3,25	**10CH 275225(1+3+1)**
	73,02	27,78	4,27	**10CH 287225(1+3+1)**
	76,2	32,54	5,16	**10CH 300225(1+3+1)**

The housing lengths **L** are only given as indication. Other dimensions on demand.

Our **10CH** seals can only be used with adjustable housings. If your housing is not adjustable, contact us.

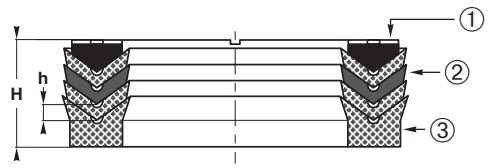

10CH...(1+3+1)

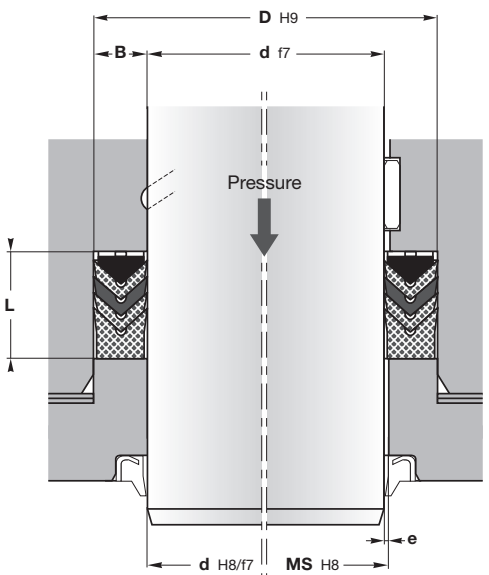

metal guiding | with guide rings

e ≤ 0,15 mm

MS = d + 2e

Machining of housings: see pages 48-49

10CH is a V-pack rod seal for heavy duty applications offering excellent performance and long life even under difficult conditions such as pressure surges, vibration and some misalignment. The seal consists of a male and female adaptor and three V-rings.

The male adapter or **spreader ring** is usually manufactured in POM but some of the larger sizes are rubberised fabric. It has radial grooves to ensure equal pressure to both sealing edges of the V-ring.

All sizes have **V-rings** manufactured from rubberised fabric increasing strength and durability and allowing an oil film **to lubricate the other parts of the seal**. The smaller sizes are supplied with a rubber V-ring between the rubberised fabric V-rings.

The female adaptor or **base ring** uses a hard rubberised fabric to support the V-rings and protect them from extrusion damage. At high pressure the lips of the base ring act as a secondary seal.

Operating conditions **see page 8**

Pressure	≤ 40 MPa
Temperature	-30°C to 120°C
Speed	≤ 0,5 m/s
Fluids	**see pages 22-45**

Materials **see pages 10-19**

Spreader ring ①	Acetal resin
V-ring ②	generally: 1 x NBR + 2 x NBR-fabric
Base ring ③	NBR-fabric

Assembly **see pages 54-59**

In open housings with adjustable length

Advantages

- High operating temperature capability
- Large range of sizes
- For difficult operating conditions: high pressure peaks, bad sliding surfaces, ...
- Adjustable
- Not sensitive to contamination of the medium

Please contact us for applications approaching maximum values.

More information

On **www.all-tec-business.net**, click first on the reference and then on the material code to obtain the data sheet of the different materials.

Calculation of housing length L

Control the length **H**. The housing length **L** must be calculated in accordance to the table below.

B	≤ 6,5	6,6→10	10,1→18	18,1→24,9	≥ 25
L	H+1	H+1,2	H+1,4	H+2	H+2,5

For special requirements (fluid, temperature, pressure, speed...) or applications approaching maximum values, please contact us. Other materials available: **FPM**, **HNBR**, **TNBR**, **EPDM**...

d	D	L	h	Reference
60	76	29	4,34	**10CH 299236(1+3+1)**
	77	27	4,59	**10CH 303236(1+3+1)**
	80	32,15	5,66	**10CH 314236(1+3+1)**
63	83	21,94	3,95	**10CH 326248/B(1+3+1)**
63,5	76,2	18,25	3,17	**10CH 300250(1+3+1)**
	79,37	23,81	4,34	**10CH 312250(1+3+1)**
	80	28	5,03	**10CH 314250(1+3+1)**
65	77	21	4,04	**10CH 303255(1+3+1)**
	85	29	5,21	**10CH 334255(1+3+1)**
	90	30	5	**10CH 354255(1+3+1)**
69,85	88,9	25,4	4,83	**10CH 350275(1+3+1)**
70	85	28	4,32	**10CH 334275(1+3+1)**
	90	21,95	3,95	**10CH 354275/B(1+3+1)**
	90	30	5,08	**10CH 354275(1+3+1)**
73,02	88,9	26,58	4,34	**10CH 350287(1+3+1)**
75	90	22,5	4,04	**10CH 354295(1+3+1)**
	95	30	5,21	**10CH 374295(1+3+1)**
	100	30	5,8	**10CH 393295(1+3+1)**
76,2	88,9	16,27	2,78	**10CH 350300(1+3+1)**
	95,25	28,97	4,98	**10CH 375300(1+3+1)**
80	95	17,5	3,05	**10CH 374314(1+3+1)**
	100	30	4,83	**10CH 393314(1+3+1)**
	105	27,41	4,98	**10CH 413314/B(1+3+1)**
82,55	101,6	28,97	4,88	**10CH 400325(1+3+1)**
85	100	17,3	2,5	**10CH 393334(1+3+1)**
88,9	101,6	17	3,4	**10CH 400350(1+3+1)**
	107,95	33,33	4,9	**10CH 425350/1(1+3+1)**
89	105	25,8	3,86	**10CH 413350(1+3+1)**
90	105	31,75	5,71	**10CH 413354(1+3+1)**
	110	25	4,88	**10CH 433354/1(1+3+1)**
	110	26,88	4,84	**10CH 433354(1+3+1)**
	115	27,41	4,98	**10CH 452354/B(1+3+1)**
95	110	24	4,11	**10CH 433374(1+3+1)**

d	D	L	h	Reference
95,25	111,13	24,3	4,09	**10CH 437375(1+3+1)**
98,42	123,82	36,96	6,55	**10CH 487387(1+3+1)**
100	114,3	20,64	3,57	**10CH 450393(1+3+1)**
	115	25,3	3,96	**10CH 452393(1+3+1)**
	120	28	5,16	**10CH 472393(1+3+1)**
	125	27,4	4,98	**10CH 492393/B(1+3+1)**
	125	36,9	6,6	**10CH 492393(1+3+1)**
104	130	37	6,73	**10CH 511409(1+3+1)**
105	120	25	4	**10CH 472413(1+3+1)**
	125	29,76	5	**10CH 492413(1+3+1)**
	135	34,5	5,8	**10CH 531413(1+3+1)**
110	132	36,5	6,96	**10CH 519433(1+3+1)**
	140	41,2	7	**10CH 551433(1+3+1)**
111,12	136,52	38,89	6,53	**10CH 537437(1+3+1)**
114	130	25,8	4,8	**10CH 511448(1+3+1)**
114,3	127	18,41	3,43	**10CH 500450(1+3+1)**
	133,35	28,18	5,26	**10CH 525450(1+3+1)**
115	140	37,12	6	**10CH 551452(1+3+1)**
117,47	142,87	36,1	6,15	**10CH 562462(1+3+1)**
120	140	30	5,36	**10CH 551472(1+3+1)**
125	145	29,62	5,18	**10CH 570492(1+3+1)**
	150	27,4	4,98	**10CH 590492/B(1+3+1)**
	155	34,5	5,8	**10CH 610492(1+3+1)**
130	150	29,76	4,96	**10CH 590511(1+3+1)**
	155	40	7,2	**10CH 610511(1+3+1)**
	160	41,5	5,5	**10CH 629511(1+3+1)**
135	155	30,55	5,11	**10CH 610531(1+3+1)**
	160	38,5	6	**10CH 629531(1+3+1)**
140	160	28,5	5,16	**10CH 629551(1+3+1)**
	165	41,95	6,56	**10CH 649551(1+3+1)**
	170	32,97	5,99	**10CH 669551/B(1+3+1)**
145	170	38,1	6,45	**10CH 669570(1+3+1)**

The housing lengths **L** are only given as indication. Other dimensions on demand.

Our **10CH** seals can only be used with adjustable housings. If your housing is not adjustable, contact us.

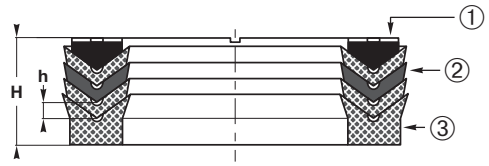

10CH...(1+3+1)

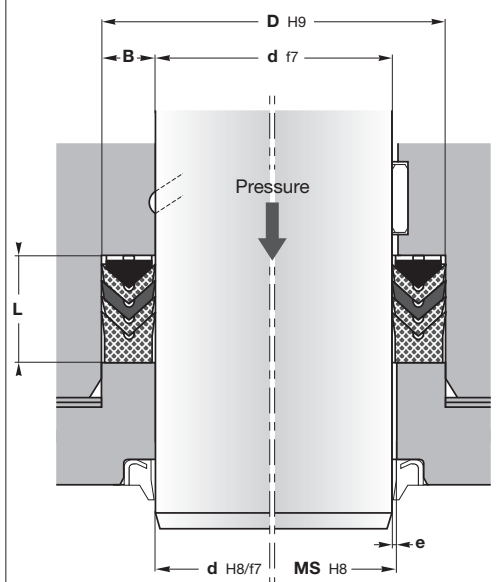

metal guiding | with guide rings

e ≤ 0,15 mm

MS = d + 2e

Machining of housings: see pages 48-49

10CH is a V-pack rod seal for heavy duty applications offering excellent performance and long life even under difficult conditions such as pressure surges, vibration and some misalignment. The seal consists of a male and female adaptor and three V-rings.

The male adapter or **spreader ring** is usually manufactured in POM but some of the larger sizes are rubberised fabric. It has radial grooves to ensure equal pressure to both sealing edges of the V-ring.

All sizes have **V-rings** manufactured from rubberised fabric increasing strength and durability and allowing an oil film **to lubricate the other parts of the seal**. The smaller sizes are supplied with a rubber V-ring between the rubberised fabric V-rings.

The female adaptor or **base ring** uses a hard rubberised fabric to support the V-rings and protect them from extrusion damage. At high pressure the lips of the base ring act as a secondary seal.

Operating conditions

see page 8

Pressure	≤ 40 MPa
Temperature	-30°C to 120°C
Speed	≤ 0,5 m/s
Fluids	see pages 22-45

Materials

see pages 10-19

Spreader ring ①	Acetal resin
V-ring ②	generally: 1 x NBR + 2 x NBR-fabric
Base ring ③	NBR-fabric

Assembly

see pages 54-59

In open housings with adjustable length

Advantages

- High operating temperature capability
- Large range of sizes
- For difficult operating conditions: high pressure peaks, bad sliding surfaces, ...
- Adjustable
- Not sensitive to contamination of the medium

Please contact us for applications approaching maximum values.

More information

On **www.all-tec-business.net**, click first on the reference and then on the material code to obtain the data sheet of the different materials.

Calculation of housing length L

Control the length **H**. The housing length **L** must be calculated in accordance to the table below.

B	≤ 6,5	6,6→10	10,1→18	18,1→24,9	≥ 25
L	H+1	H+1,2	H+1,4	H+2	H+2,5

For special requirements (fluid, temperature, pressure, speed...) or applications approaching maximum values, please contact us. Other materials available: **FPM**, **HNBR**, **TNBR**, **EPDM**...

d	D	L	h	Reference
146,05	171,45	38,89	6,53	**10CH 675575(1+3+1)**
150	170	30,56	5,16	**10CH 669590(1+3+1)**
	180	40	7	**10CH 708590(1+3+1)**
152,4	177,8	33,34	5,77	**10CH 700600(1+3+1)**
154	175	29,44	5,31	**10CH 688606(1+3+1)**
160	180	30	5	**10CH 708629(1+3+1)**
	190	32,97	5,99	**10CH 748629/B(1+3+1)**
170	195	37,5	6,55	**10CH 767669(1+3+1)**
	200	50	8	**10CH 787669(1+3+1)**
175	200	42	7,54	**10CH 787688(1+3+1)**
177,8	203,2	32,54	5,95	**10CH 800700(1+3+1)**
190	220	50,5	7,5	**10CH 866748(1+4+1)**
200	220	30	5	**10CH 866787(1+3+1)**
	230	32,97	6	**10CH 905787/B(1+3+1)**
210	240	34,5	5,8	**10CH 944826(1+3+1)**
	240	42,1	7,55	**10CH 944826/1(1+3+1)**
	240	65,5	8	**10CH 944826/2(1+5+1)**
220	250	52	8,25	**10CH 984866(1+3+1)**
228,6	254	38,1	6,3	**10CH 1000900(1+3+1)**
230	260	50,5	7,5	**10CH 1023905(1+3+1)**
240	270	45	8,03	**10CH 1062944(1+3+1)**
250	280	50,5	7,5	**10CH 1102984/2(1+3+1)**
	280	60	7,5	**10CH 1102984/1(1+5+1)**
	280	38	7,5	**10CH 1102984/3(1+2+1)**
	280	40	7,5	**10CH 1102984(1+3+1)**
260	290	51,5	7,5	**10CH 11411023(1+3+1)**
	300	49	8	**10CH 11811023(1+3+1)**

d	D	L	h	Reference
270	300	46	8	**10CH 11811062(1+3+1)**
280	310	50,5	7	**10CH 12201102(1+4+1)**
	315	38,45	6,98	**10CH 12401102/B(1+3+1)**
	320	60	10	**10CH 12591102(1+3+1)**
290	320	50,8	7,29	**10CH 12591141(1+3+1)**
300	320	32	5	**10CH 12591181(1+3+1)**
	330	52	7,5	**10CH 12991181(1+3+1)**
315	345	53,8	7,5	**10CH 13581240(1+4+1)**
	350	38,45	6,98	**10CH 13771240/B(1+3+1)**
320	350	49,2	7	**10CH 13771259(1+3+1)**
	350	41	7	**10CH 13771259/1(1+3+1)**
	360	61	9	**10CH 14171259(1+3+1)**
	365	55	8,5	**10CH 14371259(1+3+1)**
340	380	50,5	8,5	**10CH 14961338/1(1+3+1)**
350	380	50,5	7	**10CH 14961377(1+3+1)**
	390	61,6	10	**10CH 15351377(1+3+1)**
360	390	39	8	**10CH 15351417(1+2+1)**
	400	80	9	**10CH 15741417(1+5+1)**
380	420	61	10	**10CH 16531496(1+3+1)**
400	440	54	10	**10CH 17321574(1+3+1)**
	440	65,5	10	**10CH 17321574/1(1+4+1)**
410	450	65,5	10	**10CH 17711614(1+4+1)**
420	460	54	9	**10CH 18111653(1+3+1)**
450	500	76,5	13	**10CH 19681771(1+3+1)**
460	500	53,4	8,4	**10CH 19681811(1+3+1)**
500	550	74	12,5	**10CH 21651968(1+3+1)**
590	630	53	9,2	**10CH 24802322(1+3+1)**

The housing lengths **L** are only given as indication. Other dimensions on demand.

Our **10CH** seals can only be used with adjustable housings. If your housing is not adjustable, contact us.

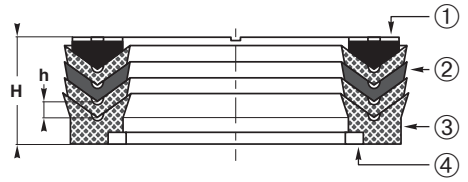

10CH.../NEI(1+3+1)

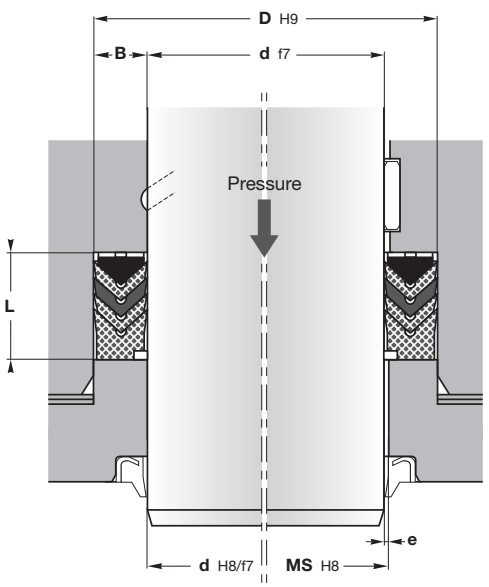

metal guiding | with guide rings

e ≤ 0,15 mm

MS = d + 2e

Machining of housings: see pages 48-49

10CH.../NEI is a V-pack rod seal for heavy duty applications offering excellent performance and long life even under difficult conditions such as pressure surges, vibration and some misalignment. The seal consists of a male and female adaptor and three V-rings.

The male adapter or **spreader ring** is usually manufactured in POM but some of the larger sizes are rubberised fabric. It has radial grooves to ensure equal pressure to both sealing edges of the V-ring.

All sizes have **V-rings** manufactured from rubberised fabric increasing strength and durability and allowing an oil film **to lubricate the other parts of the seal**. The smaller sizes are supplied with a rubber V-ring between the rubberised fabric V-rings.

The female adaptor or **base ring** uses a hard rubberised fabric and a **POM back-up ring** to support the base ring and protect him from extrusion damage. At high pressure the lips of the adaptor act as a secondary seal.

Operating conditions	**see page 8**
Pressure	≤ 50 MPa
Temperature	-30°C to 120°C
Speed	≤ 0,5 m/s
Fluids	**see pages 22-45**

Materials	**see pages 10-19**
Spreader ring ①	Acetal resin
V-ring ②	generally: 1 x NBR + 2 x NBR-fabric
Base ring ③	NBR-fabric
Anti-extrusion ring ④	Acetal resin

Assembly	**see pages 54-59**
In open housings with adjustable length	

Advantages

- High operating temperature capability
- For difficult operating conditions: high pressure peaks, bad sliding surfaces, ...
- Not sensitive to contamination of the medium
- The integrated anti-extrusion ring prevents the seal material from extrusion at higher pressure

Please contact us for applications approaching maximum values.

More information

On **www.all-tec-business.net**, click first on the reference and then on the material code to obtain the data sheet of the different materials.

Calculation of housing length L

Control the length **H**. The housing length **L** must be calculated in accordance to the table below.

B	≤ 6,5	6,6→10	10,1→18	18,1→24,9	≥ 25
L	**H**+1	**H**+1,2	**H**+1,4	**H**+2	**H**+2,5

For special requirements (fluid, temperature, pressure, speed...) or applications approaching maximum values, please contact us. Other materials available: **FPM**, **HNBR**, **TNBR**, **EPDM**...

d	D	L	h	Reference
30	45	22,2	3,8	**10CH 177118/NEI(1+3+1)**
36	51	24	4,14	**10CH 200141/NEI(1+3+1)**
40	55	22,62	4,14	**10CH 216157/NEI(1+3+1)**
45	60		22,22	**10CH 236177/NEI(1+3+1)**
50	65	24,6	4,34	**10CH 255196/NEI(1+3+1)**
	65	26	4,34	**10CH 255196/1/NEI(131)**
52	72	32,5	5,8	**10CH 284204/NEI(1+3+1)**
60	75	19	3	**10CH 295236/NEI(1+3+1)**
	80	32,15	5,66	**10CH 314236/NEI(1+3+1)**
63,5	82,55	26,59	4,76	**10CH 325250/NEI(1+3+1)**
65	80	26	4	**10CH 314255/NEI(1+3+1)**
70	83	25	4,25	**10CH 326275/NEI(1+3+1)**
	90	30	5,08	**10CH 354275/NEI(1+3+1)**
80	100	30	4,83	**10CH 393314/NEI(1+3+1)**
85	105	30	5,35	**10CH 413334-1/NEI(141)**
110	130	30	5	**10CH 511433/NEI(1+3+1)**
	135	41,5	7	**10CH 531433/NEI(1+3+1)**
115	130	25,49		**10CH 511452/NEI(1+3+1)**
120	145	39,5	7,25	**10CH 570472/NEI(1+3+1)**
175	190	25	5	**10CH 748688/NEI(1+3+1)**
250	280	40	7,5	**10CH 1102984/NEI(1+3+1)**

The housing lengths **L** are only given as indication. Other dimensions on demand.

Our **10CH.../NEI** seals can only be used with adjustable housings. If your housing is not adjustable, contact us.

10CH...-V

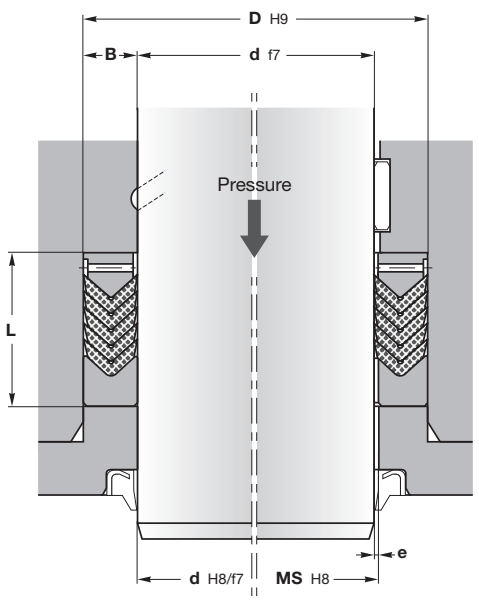

metal guiding | with guide rings

e ≤ 0,15 mm

MS = d + 2e

Machining of housings: see pages 48-49

The intermediate **10CH...-V** shaped rings (V-rings) are the real sealing elements of Veepac seals. Their particular shape confers the capacity of increasing sealing effectiveness under high pressure. In standard version they are made in cotton fabric reinforced NBR.

It is possible to machine the **spreader** and the **base rings** following the drawings here below.

Operating conditions	**see page 8**
Pressure	≤ 40 MPa
Temperature	-30°C to 120°C
Speed	≤ 0,5 m/s
Fluids	**see pages 22-45**

Materials	**see pages 10-19**
V-ring	NBR with cotton fabric

Assembly	**see pages 54-59**
In open grooves	

Advantages

- High operating temperature capability
- For difficult operating conditions: high pressure peaks, bad sliding surfaces, ...
- Not sensitive to contamination of the medium

Please contact us for applications approaching maximum values.

More information

On **www.all-tec-business.net**, click first on the reference and then on the material code to obtain the data sheet of the material.

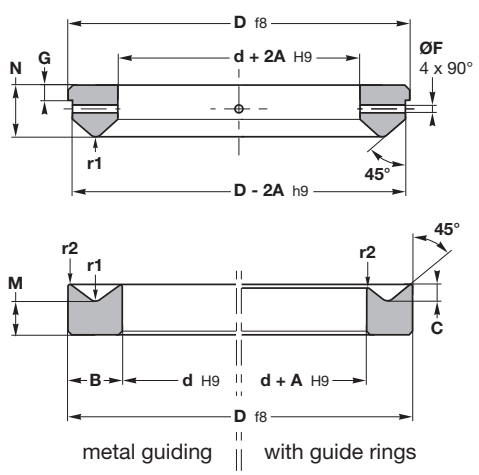

metal guiding | with guide rings

Drawings for spreader and base rings

c/s B	A	C	F	M	N	G	r1	r2
≤ 6	0,5	2,1	2	9	9	3	1,2	0,3
≤ 7,5	0,5	2,7	2,5	10	10	3	1,5	0,4
≤ 10	1	3,8	2,5	11	11	3,5	2	0,4
≤ 12,5	1	4,8	2,5	12	13	4	2,5	0,4
≤ 15	1	5,8	3	13,5	16	5	3	0,5
≤ 20	1	7,9	3	17	20	5	4	0,5

For special requirements (fluid, temperature, pressure, speed...) or applications approaching maximum values, please contact us. Other materials available: **FPM**, **HNBR**, **TNBR**, **EPDM**...

d	D	h	Reference
20	30	3,81	**10CH 118078-V**
22	32	2,75	**10CH 125086-V**
25	35	2,82	**10CH 137098-V**
	40	3,5	**10CH 157098-V**
28	40	2,8	**10CH 157110-V**
30	40	3,76	**10CH 157118-V**
	42	3,45	**10CH 165118-V**
	45	3,8	**10CH 177118/NEI-V**
35	45	3,81	**10CH 177137-V**
	50	3,57	**10CH 196137-V**
38,1	50,8	3,51	**10CH 200150-V**
	57,15	3,8	**10CH 225150-V**
40	50	2,82	**10CH 196157-V**
	55	3,84	**10CH 216157-V**
	56	3,17	**10CH 220157/B-V**
	60	5,16	**10CH 236157-V**
44,45	57,15	3,38	**10CH 225175-V**
	60,32	4,07	**10CH 237175-V**
45	55	2,8	**10CH 216177-V**
	60	3,89	**10CH 236177-V**
	65	5,34	**10CH 255177-V**
48	60	4,07	**10CH 236188-V**
	63	3,9	**10CH 248188/G1-V**
50	65	4,34	**10CH 255196/NEI-V**
	70	3,95	**10CH 275196/B-V**
	70	5,16	**10CH 275196-V**
50,8	63,5	3,35	**10CH 250200-V**
55	70	4,05	**10CH 275216-V**
	75	6,48	**10CH 295216-V**
56	71	3	**10CH 279220-V**
	76	5,38	**10CH 299220-V**
57,15	69,85	3,25	**10CH 275225-V**
	76,2	5,16	**10CH 300225-V**

d	D	h	Reference
60	75	3	**10CH 295236/NEI-V**
	76	4,34	**10CH 299236-V**
	80	5,66	**10CH 314236-V**
63,5	76,2	3,17	**10CH 300250-V**
	79,37	4,34	**10CH 312250-V**
65	85	5,21	**10CH 334255-V**
	90	5	**10CH 354255-V**
70	90	3,95	**10CH 354275/B-V**
	90	5,08	**10CH 354275-V**
75	100	5,8	**10CH 393295-V**
76,2	95,25	5,16	**10CH 375300-V**
80	95	3,05	**10CH 374314-V**
	100	4,83	**10CH 393314-V**
82,55	101,6	4,88	**10CH 400325-V**
85	100	2,5	**10CH 393334-V**
	105	5,35	**10CH 413334/NEI-V**
90	110	4,84	**10CH 433354-V**
	115	4,98	**10CH 452354/B-V**
95	110	4,11	**10CH 433374-V**
100	120	5,16	**10CH 472393-V**
	125	6,6	**10CH 492393-V**
105	120	4	**10CH 472413-V**
	125	5	**10CH 492413-V**
115	140	6	**10CH 551452-V**
120	140	5,36	**10CH 551472-V**
127	152,4	6,48	**10CH 600500/NEO-V**
130	150	4,96	**10CH 590511-V**
	155	7,2	**10CH 610511-V**
140	160	5,16	**10CH 629551-V**
	165	6,56	**10CH 649551-V**

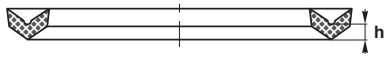

10CH...-V

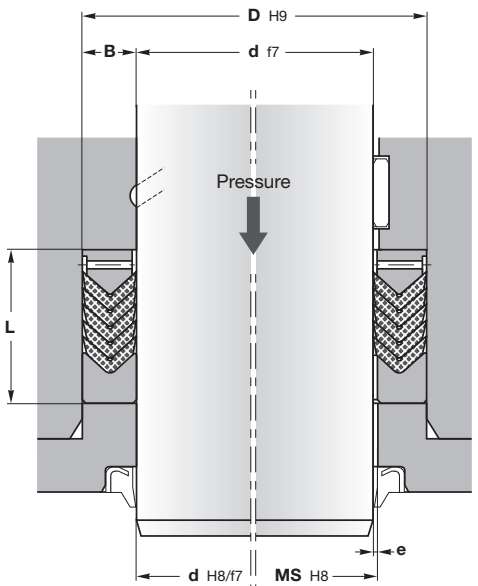

metal guiding || with guide rings

e ≤ 0,15 mm

MS = d + 2e

Machining of housings: see pages 48-49

The intermediate **10CH...-V** shaped rings (V-rings) are the real sealing elements of Veepac seals. Their particular shape confers the capacity of increasing sealing effectiveness under high pressure. In standard version they are made in cotton fabric reinforced NBR.

It is possible to machine the **spreader** and the **base rings** following the drawings here below.

Operating conditions	**see page 8**
Pressure	≤ 40 MPa
Temperature	-30°C to 120°C
Speed	≤ 0,5 m/s
Fluids	**see pages 22-45**

Materials	**see pages 10-19**
V-ring	NBR with cotton fabric

Assembly	**see pages 54-59**
In open grooves	

Advantages

- High operating temperature capability
- For difficult operating conditions: high pressure peaks, bad sliding surfaces, ...
- Not sensitive to contamination of the medium

Please contact us for applications approaching maximum values.

More information

On **www.all-tec-business.net**, click first on the reference and then on the material code to obtain the data sheet of the material.

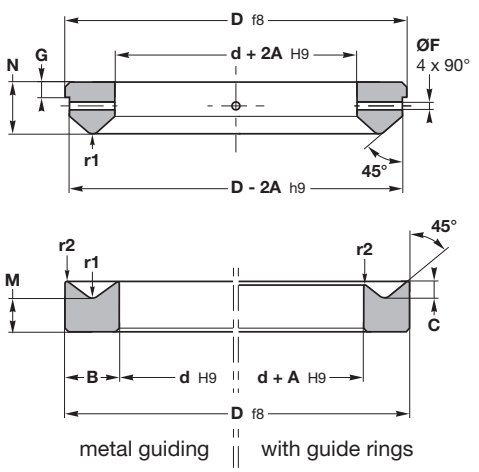

Drawings for spreader and base rings

c/s B	A	C	F	M	N	G	r1	r2
≤ 6	0,5	2,1	2	9	9	3	1,2	0,3
≤ 7,5	0,5	2,7	2,5	10	10	3	1,5	0,4
≤ 10	1	3,8	2,5	11	11	3,5	2	0,4
≤ 12,5	1	4,8	2,5	12	13	4	2,5	0,4
≤ 15	1	5,8	3	13,5	16	5	3	0,5
≤ 20	1	7,9	3	17	20	5	4	0,5

For special requirements (fluid, temperature, pressure, speed...) or applications approaching maximum values, please contact us. Other materials available: **FPM**, **HNBR**, **TNBR**, **EPDM**...

d	D	h	Reference
150	180	7	**10CH 708590-V**
152,4	177,8	5,77	**10CH 700600-V**
160	190	5,99	**10CH 748629/B-V**
177,8	209,55	7,8	**10CH 825700-V**
180	200	5	**10CH 787708-V**
	210	5,99	**10CH 826708/B/NEO-V**
200	220	5	**10CH 866787-V**
220	250	8,25	**10CH 984866-V**
230	260	7,5	**10CH 1023905-V**
240	270	7	**10CH 1062944-V**
250	270	5	**10CH 1062984-V**
	280	5,99	**10CH 1102984/B/NEO-V**
	280	7,5	**10CH 1102984-V**

d	D	h	Reference
260	290	7,5	**10CH 11411023-V**
270	300	8	**10CH 11811062-V**
290	320	7,5	**10CH 12591141-V**
300	330	7,5	**10CH 12991181-V**
350	390	10,54	**10CH 15351377-V**
360	400	9	**10CH 15741417-V**
400	440	10	**10CH 17321574-V**
410	450	10	**10CH 17711614-V**
450	490	9	**10CH 19291771-V**
500	540	9	**10CH 21261968-V**

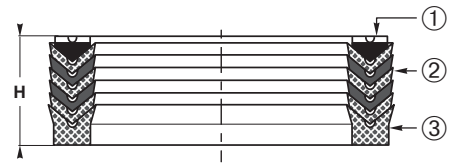

10CH1

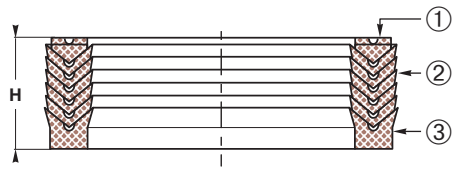

11CH1...FPM-C

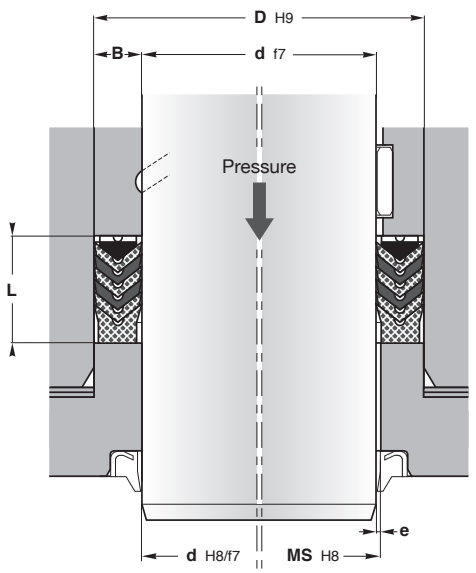

metal guiding | with guide rings

e ≤ 0,15 mm

MS = d + 2e

Machining of housings: see pages 48-49

V-pack set **10CH1** is a sealing system with 3 fabric and 2 elastomer sealing rings. This combination guarantees minimal leakage. The V-packs are, due to their geometrical composition, always used in conjunction with a spreader ring and a base ring. V-pack sets are used in extreme application areas.

10CH1 V-packs are made up of "V" shaped rings combination that are preformed and moulded with NBR applied on cotton fabric.

They consist of 7 elements in total which are 1 spreader ring, 3 NBR-fabric V-ring, 2 NBR V-ring and 1 NBR-fabric base ring.

These packs are recommended to be used in rod applications and be assembled in open seal housings.

It is not recommended to overpress the rings during assembly because it will lead to high friction and very short lifespan.

Operating conditions	**see page 8**
Pressure	≤40 MPa
Temperature	
10CH1	-30°C to 105°C
11CH1...FPM-C	-20°C to 150°C
Speed	≤ 0,5 m/s
Fluids	**see pages 22-45**

Materials NBR seals	**see pages 10-19**
Spreader ring ①	Acetal resin or NBR-fabric
V-ring ②	generally: 2 x NBR + 3 x NBR-fabric
Base ring ③	NBR-fabric

Materials FPM seals	**see pages 10-19**
Spreader ring ①	FPM-fabric
V-ring ②	generally: 5 x FPM-fabric
Base ring ③	FPM-fabric

Assembly	**see pages 54-59**
In open housings with adjustable length	

Advantages

- High operating temperature capability
- Large range of sizes
- For difficult operating conditions: high pressure peaks, bad sliding surfaces, ...
- Adjustable
- Not sensitive to contamination of the medium

Please contact us for applications approaching maximum values.

More information

On **www.all-tec-business.net**, click first on the reference and then on the material code to obtain the data sheet of the different materials.

Calculation of housing length L

Control the length **H**. The housing length **L** must be calculated in accordance to the table below.

B	≤ 5	5,1→6,5	6,6→10
L	**H**+1	**H**+1,2	**H**+1,5

For special requirements (fluid, temperature, pressure, speed...) or applications approaching maximum values, please contact us. Other materials available: **FPM**, **HNBR**, **TNBR**, **EPDM**...

d	D	L	Reference
8	18	18,5	**10CH1-008**
10	20	18,5	**10CH1-010**
12	22	18,5	**10CH1-012**
14	24	18,5	**10CH1-014**
15	25	18,5	**10CH1-015**
16	26	18,5	**10CH1-016**
18	28	18,5	**10CH1-018**
20	30	18,5	**10CH1-020**
22	32	18,5	**10CH1-022**
25	37	22,5	**10CH1-025**
28	40	22,5	**10CH1-028**
30	42	22,5	**10CH1-030**
32	44	22,5	**10CH1-032**
35	47	22,5	**10CH1-035**
36	48	22,5	**10CH1-036**
40	52	22,5	**10CH1-040**
42	54	22,5	**10CH1-042**
45	60	22,5	**10CH1-045**
48	63	22,5	**10CH1-048**
50	65	22,5	**10CH1-050**
55	70	22,5	**10CH1-055**
56	71	22,5	**10CH1-056**
60	75	22,5	**10CH1-060**
63	78	22,5	**10CH1-063**
65	80	22,5	**10CH1-065**
70	85	22,5	**10CH1-070**
75	90	22,5	**10CH1-075**
80	95	22,5	**10CH1-080**
85	100	22,5	**10CH1-085**
90	105	22,5	**10CH1-090**
100	115	30	**10CH1-100**
110	125	30	**10CH1-110**
115	130	30	**10CH1-115**
125	140	34	**10CH1-125**
140	155	34	**10CH1-140**
150	170	40	**10CH1-150**
160	180	40	**10CH1-160**
180	200	40	**10CH1-180**
200	220	40	**10CH1-200**

FPM seals			
d	D	L	Reference
20	30	18,5	**11CH1-020 FPM-C**
22	32	18,5	**11CH1-022 FPM-C**
25	37	22,5	**11CH1-025 FPM-C**
28	40	22,5	**11CH1-028 FPM-C**
30	42	22,5	**11CH1-030 FPM-C**
32	44	22,5	**11CH1-032 FPM-C**
35	47	22,5	**11CH1-035 FPM-C**
36	48	22,5	**11CH1-036 FPM-C**
40	52	22,5	**11CH1-040 FPM-C**
45	60	22,5	**11CH1-045 FPM-C**
50	65	22,5	**11CH1-050 FPM-C**
55	70	22,5	**11CH1-055 FPM-C**
56	71	22,5	**11CH1-056 FPM-C**
60	75	22,5	**11CH1-060 FPM-C**
70	85	22,5	**11CH1-070 FPM-C**
80	95	22,5	**11CH1-080 FPM-C**
90	105	22,5	**11CH1-090 FPM-C**
100	115	30	**11CH1-100 FPM-C**
110	125	30	**11CH1-110 FPM-C**
125	140	34	**11CH1-125 FPM-C**
140	155	34	**11CH1-140 FPM-C**
150	170	40	**11CH1-150 FPM-C**
160	180	40	**11CH1-160 FPM-C**
180	200	40	**11CH1-180 FPM-C**
200	220	40	**11CH1-200 FPM-C**

The housing lengths **L** are only given as indication. Other dimensions on demand.

Our **10CH1** and **11CH1...FPM-C** seals can only be used with adjustable housings. If your housing is not adjustable, contact us.

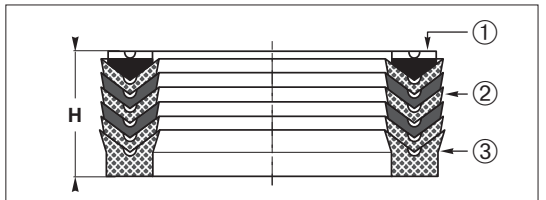

10CH2

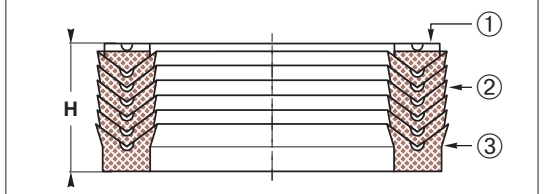

11CH2...FPM-C

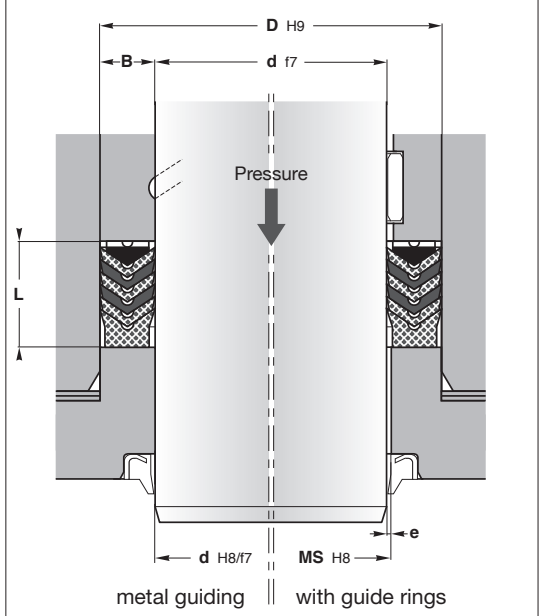

e ≤ 0,15 mm

MS = d + 2e

Machining of housings: see pages 48-49

V-pack set **10CH2** is a sealing system with 3 fabric and 2 elastomer sealing rings. This combination guarantees minimal leakage. The V-packs are, due to their geometrical composition, always used in conjunction with a spreader ring and a base ring. V-pack sets are used in extreme application areas.

10CH2 V-packs are made up of "V" shaped rings combination that are preformed and moulded with NBR applied on cotton fabric.

They consist of 7 elements in total which are 1 spreader ring, 3 NBR-fabric V-ring, 2 NBR V-ring and 1 NBR-fabric base ring.

These packs are recommended to be used in rod applications and be assembled in open seal housing.

It is not recommended to overpress the rings during assembly because it will lead to high friction and very short lifespan.

Operating conditions	see page 8
Pressure	≤ 50 MPa
Temperature	
10CH2	-30°C to 105°C
11CH2...FPM-C	-20°C to 150°C
Speed	≤ 0,5 m/s
Fluids	see pages 22-45

Materials NBR seals	see pages 10-19
Spreader ring ①	Acetal resin or NBR-fabric
V-ring ②	generally: 2 x NBR + 3 x NBR-fabric
Base ring ③	NBR-fabric

Materials FPM seals	see pages 10-19
Spreader ring ①	PT01
V-ring ②	generally: 5 x FPM-fabric
Base ring ③	FPM-fabric

Assembly	see pages 54-59
In open housings with adjustable length	

Advantages

- High operating temperature capability
- Large range of sizes
- For difficult operating conditions: high pressure peaks, bad sliding surfaces, ...
- Adjustable
- Not sensitive to contamination of the medium

Please contact us for applications approaching maximum values.

More information

On **www.all-tec-business.net**, click first on the reference and then on the material code to obtain the data sheet of the different materials.

Calculation of housing length L

Control the length **H**. The housing length **L** must be calculated in accordance to the table below.

B	≤ 6,5	6,6→10	10,1→15
L	**H**+1,2	**H**+1,5	**H**+1,8

For special requirements (fluid, temperature, pressure, speed...) or applications approaching maximum values, please contact us. Other materials available: **FPM**, **HNBR**, **TNBR**, **EPDM**...

d	D	L	Reference
20	32	22,5	**10CH2-020**
22	34	22,5	**10CH2-022**
25	40	22,5	**10CH2-025**
28	43	22,5	**10CH2-028**
30	45	22,5	**10CH2-030**
32	47	22,5	**10CH2-032**
35	50	22,5	**10CH2-035**
36	51	22,5	**10CH2-036**
40	55	22,5	**10CH2-040**
42	57	22,5	**10CH2-042**
45	65	27,5	**10CH2-045**
50	70	30	**10CH2-050**
55	75	30	**10CH2-055**
56	76	37	**10CH2-056**
60	80	37	**10CH2-060**
63	83	37	**10CH2-063**
65	85	40	**10CH2-065**
70	90	40	**10CH2-070**
75	95	40	**10CH2-075**
80	100	40	**10CH2-080**
85	105	40	**11CH2-085**
90	110	40	**10CH2-090**
100	120	40	**10CH2-100**
110	130	40	**10CH2-110**
115	140	46	**10CH2-115**
120	145	46	**10CH2-120**
125	150	46	**10CH2-125**
140	165	46	**10CH2-140**
150	180	60	**10CH2-150**
160	190	60	**10CH2-160**
180	210	60	**10CH2-180**
200	230	60	**10CH2-200**

FPM seals			
d	D	L	Reference
20	32	22,5	**11CH2-020 FPM-C**
25	40	22,5	**11CH2-025 FPM-C**
28	43	22,5	**11CH2-028 FPM-C**
30	45	22,5	**11CH2-030 FPM-C**
35	50	22,5	**11CH2-035 FPM-C**
36	51	22,5	**11CH2-036 FPM-C**
40	55	22,5	**11CH2-040 FPM-C**
45	65	27,5	**11CH2-045 FPM-C**
50	70	30	**11CH2-050 FPM-C**
55	75	30	**11CH2-055 FPM-C**
56	76	37	**11CH2-056 FPM-C**
60	80	37	**11CH2-060 FPM-C**
63	83	37	**11CH2-063 FPM-C**
65	85	40	**11CH2-065 FPM-C**
70	90	40	**11CH2-070 FPM-C**
80	100	40	**11CH2-080 FPM-C**
85	105	40	**11CH2-085 FPM-C**
90	110	40	**11CH2-090 FPM-C**
100	120	40	**11CH2-100 FPM-C**
110	130	40	**11CH2-110 FPM-C**
125	150	46	**11CH2-125 FPM-C**
140	165	46	**11CH2-140 FPM-C**
160	190	60	**11CH2-160 FPM-C**
180	210	60	**11CH2-180 FPM-C**
200	230	60	**11CH2-200 FPM-C**

The housing lengths **L** are only given has indication. Other dimensions on demand.

Our **10CH2** and **11CH2...FPM-C** seals can only be used with adjustable housings. If your housing is not adjustable, contact us.

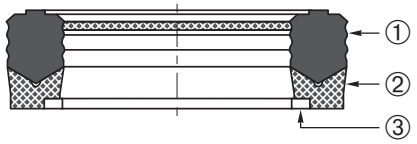

10SM

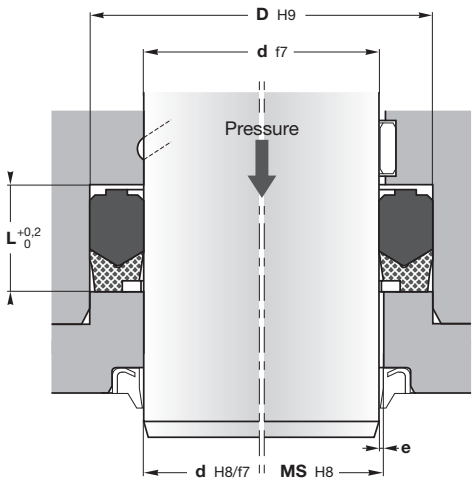

metal guiding **with guide rings**

MS = d + 2e

Machining of housings: see pages 48-49

d (mm)	e (mm)
≤ 110	≤ 0,2
> 110	≤ 0,35

Rod seal type **10SM** series consists of a NBR sealing element and a supporting element of TPE or cotton fabric reinforced nitrile elastomere, with integrated anti-extrusion ring in POM.

The NBR sealing element made of highly wear-resistant nitrile rubber has a high tensile strength and a low compression set.

This **10SM** sealing element is designed for **heavy duty applications**.

This design in 3 pieces is only allowed in open housings.

Operating conditions	**see page 8**
Pressure	≤ 70 MPa
Temperature	-30°C to 110°C
Speed	≤ 0,5 m/s
Fluids	**see pages 22-45**

Materials	**see pages 10-19**
Sealing element ①	NBR
Base ring ②	NBR-fabric or TPE
Anti-extrusion ring ③	Acetal resin

Assembly	**see pages 54-59**
In open grooves	

Advantages

- Extrusion resistance at high pressure
- No housing adjustment necessary
- Good price-performance ratio
- High sealing efficiency
- Good sealing during vibrations and shock loadings

Please contact us for applications approaching maximum values.

More information

On **www.all-tec-business.net**, click first on the reference and then on the material code to obtain the data sheet of the different materials.

For special requirements (fluid, temperature, pressure, speed...) or applications approaching maximum values, please contact us. Other materials available: **FPM**, **HNBR**, **TNBR**, **EPDM**...

d	D	L	Alternative reference	Reference
20	33	20	15SME 2033/1AX	10SM 129078/1AX
22	35	20	15SME 2235/1AX	10SM 137086/1AX
25	38	20	15SME 2538/1AX	10SM 149098/1AX
28	41	20	15SME 2841/1AX	10SM 161110/1AX
30	43	20	15SME 3043/1AX	10SM 169118/1AX
32	47	22,5	15SME 3247/1AX	
35	45	25,59	15SME 3545/1AX	
	50	22,5	15SME 3550/1AX	10SM 196137/1AX
36	51	22,5		10SM 200141/1AX
40	52	22,5	15SME 4052/1AX	10SM 204157/1AX
	55	22,62	15SME 4055/1AX	10SM 216157/1AX
	60	30	15SME 4060/1AX	
45	60	22,5	15SME 4560/1AX	10SM 236177/1AX
	65	28		10SM 255177/1AX
50	63	20		10SM 248196/1AX
	65	22,5	15SME 5065/1CX	10SM 255196/1CX
	65	24,5	15SME 5065/1AX	10SM 255196/1AX
	70	30	15SME 5070/1BX	10SM 275196/1BX
	70	31,9		10SM 275196/1AX
55	70	22,5	15SME 5570/2AX	10SM 275216/2AX
	70	25		10SM 275216/1AX
	75	30	15SME 5575/2AX	
56	71	25		10SM 279220/1AX
60	75	22,5	15SME 6075/2AX	10SM 295236/2AX
	75	25	15SME 6075/1AX	10SM 295236/1AX
	77	27	15SME 6077/1AX	10SM 303236/1AX
	80	32		10SM 314236/1BX
63	83	29	15SME 6383/1AX	
65	85	29	15SME 6585/1AX	
70	83	25		10SM 326275/1AX
	85	22,5	15SME 7085/1AX	10SM 334275/1AX
	85	25		10SM 334275/1BX
	90	30	15SME 7090/1AX	10SM 354275/1AX
	90	31,9	15SME 7090/2AX	
75	95	28		10SM 374295/2AX
76,5	96,5	32,5		10SM 379301/1AX
80	100	30	15SME 80100/1AX	10SM 393314/1AX
85	98	25		10SM 385334/1AX

For prices and availability: **www.all-tec-business.net**

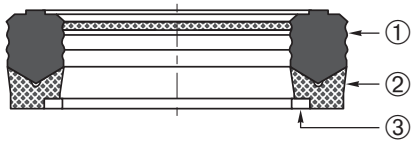

10SM

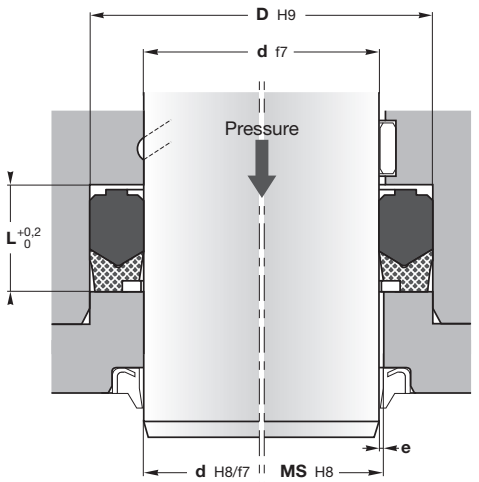

metal guiding **with guide rings**

MS = d + 2e

Machining of housings: see pages 48-49

d (mm)	e (mm)
≤ 110	≤ 0,2
> 110	≤ 0,35

Rod seal type **10SM** series consists of a NBR sealing element and a supporting element of TPE or cotton fabric reinforced nitrile elastomere, with integrated anti-extrusion ring in POM.

The NBR sealing element made of highly wear-resistant nitrile rubber has a high tensile strength and a low compression set.

This **10SM** sealing element is designed for **heavy duty applications**.

This design in 3 pieces is only allowed in open housings.

Operating conditions	**see page 8**
Pressure	≤ 70 MPa
Temperature	-30°C to 110°C
Speed	≤ 0,5 m/s
Fluids	**see pages 22-45**

Materials	**see pages 10-19**
Sealing element ①	NBR
Base ring ②	NBR-fabric or TPE
Anti-extrusion ring ③	Acetal resin

Assembly	**see pages 54-59**
In open grooves	

Advantages

- Extrusion resistance at high pressure
- No housing adjustment necessary
- Good price-performance ratio
- High sealing efficiency
- Good sealing during vibrations and shock loadings

Please contact us for applications approaching maximum values.

More information

On **www.all-tec-business.net**, click first on the reference and then on the material code to obtain the data sheet of the different materials.

d	D	L	Alternative reference	Reference
90	105	22,5	15SME 90105/2AX	
	105	25	15SME 90105/1AX	10SM 413354/1AX
	110	30	15SME 90110/1AX	10SM 433354/1AX
100	114,3	24,21	15SME 100114/1AX	10SM 450393/1AX
	120	30	15SME 100120/1AX	10SM 472393/1AX
110	130	32,5	15SME 110130/1AX	10SM 511433/1AX
115	130	30		10SM 511452/1AX
120	140	30		10SM 551472/1AX
125	145	29,62		10SM 570492/1AX
130	150	28		10SM 590511/1AX
140	160	28	15SME 140160/1AX	10SM 629551/1AX
150	170	28	15SME 150170/1AX	10SM 669590/1AX
160	180	28	15SME 160180/1AX	10SM 708629/1AX
170	195	35	15SME 170195/1AX	
180	205	35	15SME 180205/1AX	10SM 807708/1AX
190	215	35	15SME 190215/2AX	10SM 846748/2AX
200	225	35	15SME 200225/1AX	10SM 885787/1AX
220	245	35		10SM 964866/1AX
250	275	35	15SME 250275/1AX	10SM 1082984/1AX
280	305	35		10SM 12011102/1AX

For special requirements (fluid, temperature, pressure, speed...) or applications approaching maximum values, please contact us. Other materials available: **FPM**, **HNBR**, **TNBR**, **EPDM**...

For prices and availability: **www.all-tec-business.net**

Fabric reinforced NBR compact rod seal

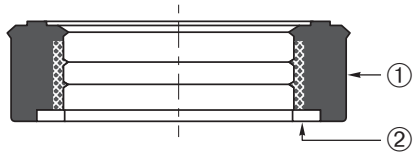

10SM.../M

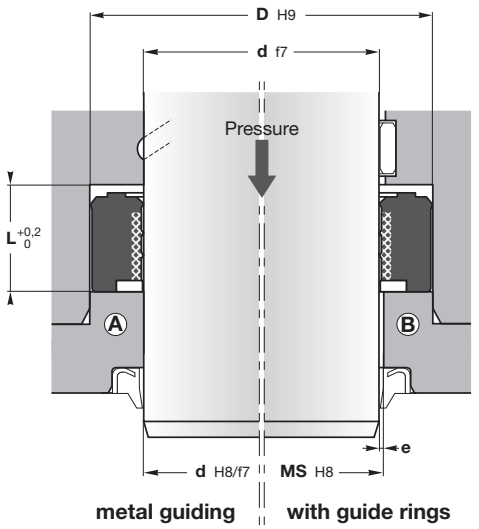

MS = d + 2e

Machining of housings: see pages 48-49

d (mm)	e (mm)
≤ 40	≤ 0,3
> 40	≤ 0,4

10SM.../M compact rod seal has a great contact sealing surface in reinforced cotton fabric. To provide initial sealing under low pressure the inner surface has two sealing edges. Even with a worn piston rod the greater sealing surface continues to give good sealing.

The POM back-up ring even accepts relativly large clearance gaps.

Operating conditions	**see page 8**
Pressure	≤ 25 MPa
Temperature	-30°C to 110°C
Speed	≤ 0,5 m/s
Fluids	**see pages 22-45**

Materials	**see pages 10-19**
Sealing element ①	NBR fabric-reinforced inside
Anti-extrusion ring ②	Acetal resin

Assembly	**see pages 54-59**
In open grooves	

Advantages

Extrusion resistance at high pressure
No housing adjustment necessary

Please contact us for applications approaching maximum values.

More information

On **www.all-tec-business.net**, click first on the reference and then on the material code to obtain the data sheet of the different materials.

For special requirements (fluid, temperature, pressure, speed...) or applications approaching maximum values, please contact us. Other materials available: **FPM**, **HNBR**, **TNBR**, **EPDM**...

d	D	L	Reference
40	52	22,5	**10SM 204157/M**
50	65	22,5	**10SM 255196/M**
60	75	22,5	**10SM 295236/M**
70	85	22,5	**10SM 334275/M**
80	95	22,5	**10SM 374314/M**
90	105	22,5	**10SM 413354/M**
100	115	30	**10SM 452393/M**

For prices and availability: **www.all-tec-business.net**

10EU

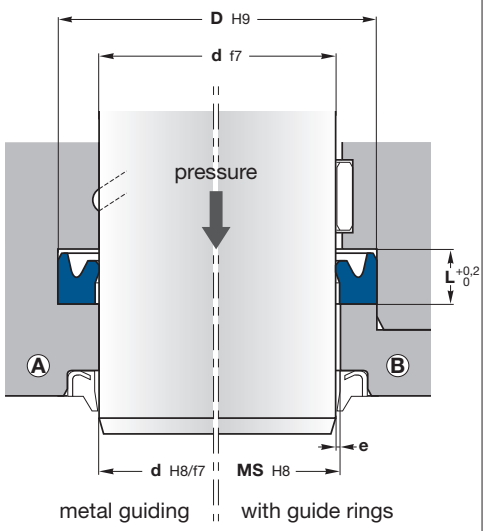

MS = d + 2e

Machining of housings: see pages 48-49

Pressure (MPa)	e (mm)	
	d ≤ 60 mm	**d** > 60 mm
5	≤ 0,4	≤ 0,5
10	≤ 0,3	≤ 0,4
20	≤ 0,2	≤ 0,3
30	≤ 0,15	≤ 0,2
40	≤ 0,1	≤ 0,15

10EU U-ring is a single-acting rod seal with an asymmetrical design. Due to the geometry and material, this seal is exceptionally well-suited for shock pressure peaks and **low friction** in the low pressure range.

Operating conditions	**see page 8**
Pressure	≤ 40 MPa
Temperature	-30°C to 100°C
Speed	≤ 0,5 m/s
Fluids	**see pages 22-45**

Materials	**see pages 10-19**
Seal	Polyurethane

Assembly	**see pages 54-59**
In closed grooves Ⓐ	
In open grooves Ⓑ	

Advantages

- Low friction in the low pressure range
- Excellent abrasion resistance
- Good price-performance ratio
- Simple assembly
- Good resistance to clearance extrusion
- Can be installed as single seal or as secondary seal
- Unaffected by high loads and deflections of the rod

Please contact us for applications approaching maximum values.

More information

On **www.all-tec-business.net**, click first on the reference and then on the material code to obtain the data sheet of the material.

For special requirements (fluid, temperature, pressure, speed...) or applications approaching maximum values, please contact us. Other materials available: **FPM**, **HNBR**, **TNBR**, **EPDM**...

d	D	L	Reference
8	16	6,3	**10EU 0816**
	18	9	**10EU 0818/1**
10	18	6,3	**10EU 1018**
	20	8	**10EU 1020**
12	17	4	**10EU 1217**
	20	5,5	**10EU 1220/1**
	20	6,3	**10EU 1220**
	22	8	**10EU 1222**
14	22	6,3	**10EU 1422**
	24	8	**10EU 1424**
15	22	5,1	**10EU 1522**
	23	6,3	**10EU 1523/1**
	25	9	**10EU 1525/1**
16	20,6	3,6	**10EU 1621**
	22	6	**10EU 1622**
	24	6,3	**10EU 1624**
	26	8	**10EU 1626**
18	24	5,2	**10EU 1824**
	24	6	**10EU 1824/1**
	25	5,5	**10EU 1825**
	26	6,3	**10EU 1826/1**
	26	9	**10EU 1826**
	28	8	**10EU 1828**
	28	9	**10EU 1828/1**
20	26	4,7	**10EU 2026**
	26	5,5	**10EU 2026/1**
	28	6,3	**10EU 2028**
	28	7	**10EU 2028/1**
	28	8	**10EU 2028/2**
	30	8	**10EU 2030**
	30	9	**10EU 2030/2**
	35	11	**10EU 2035**
22	30	6,3	**10EU 2230/1**
	30	9	**10EU 2230**
	32	8	**10EU 2232/1**
	32	10	**10EU 2232**
24	30	5	**10EU 2430**
	34	8	**10EU 2434**

d	D	L	Reference
25	32	7	**10EU 2532**
	33	5,7	**10EU 2533/4**
	33	6,4	**10EU 2533**
	33	7	**10EU 2533/3**
	33	8	**10EU 2533/1**
	33	11	**10EU 2533/2**
	35	7	**10EU 2535/3**
	35	8	**10EU 2535**
	35	9	**10EU 2535/2**
	38	9,5	**10EU 2538**
	38	10	**10EU 2538/1**
	40	11	**10EU 2540**
28	36	6,3	**10EU 2836**
	36	11	**10EU 2836/1**
	38	7	**10EU 2838/3**
	38	8	**10EU 2838**
	38	9	**10EU 2838/1**
	38	11	**10EU 2838/2**
	40	9,5	**10EU 2840**
	40	11	**10EU 2840/2**
	43	12,5	**10EU 2843**
30	38	6,3	**10EU 3038**
	38	9	**10EU 3038/1**
	40	6,3	**10EU 3040/3**
	40	8	**10EU 3040**
	40	11	**10EU 3040/1**
	43	10	**10EU 3043**
	45	9	**10EU 3045/1**
32	40	6,3	**10EU 3240/1**
	40	9	**10EU 3240**
	42	7	**10EU 3242/3**
	42	8	**10EU 3242**
	42	11	**10EU 3242/1**
32	45	11	**10EU 3245**
	47	11	**10EU 3247/1**
33	43	11	**10EU 3343/1**
34	50	13	**10EU 3450**

10EU seals with diameters between 20 and 1500 mm can be manufactured within short delivery time.
For prices and availability: **www.all-tec-business.net**

10EU

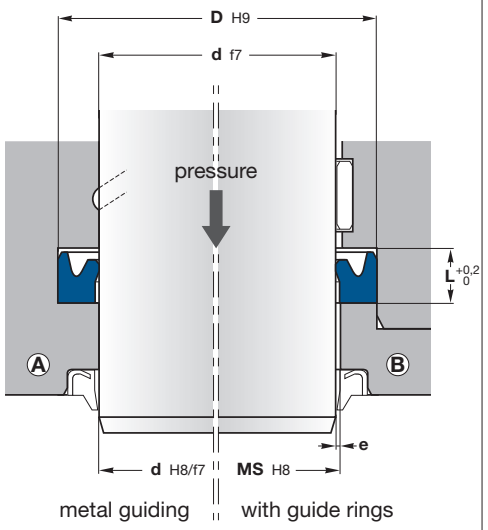

MS = d + 2e

Machining of housings: see pages 48-49

Pressure (MPa)	e (mm)	
	d ≤ 60 mm	**d** > 60 mm
5	≤ 0,4	≤ 0,5
10	≤ 0,3	≤ 0,4
20	≤ 0,2	≤ 0,3
30	≤ 0,15	≤ 0,2
40	≤ 0,1	≤ 0,15

10EU U-ring is a single-acting rod seal with an asymmetrical design. Due to the geometry and material, this seal is exceptionally well-suited for shock pressure peaks and **low friction** in the low pressure range.

Operating conditions	see page 8
Pressure	≤ 40 MPa
Temperature	-30°C to 100°C
Speed	≤ 0,5 m/s
Fluids	see pages 22-45

Materials	see pages 10-19
Seal	Polyurethane

Assembly	see pages 54-59
In closed grooves Ⓐ	
In open grooves Ⓑ	

Advantages

- Low friction in the low pressure range
- Excellent abrasion resistance
- Good price-performance ratio
- Simple assembly
- Good resistance to clearance extrusion
- Can be installed as single seal or as secondary seal
- Unaffected by high loads and deflections of the rod

Please contact us for applications approaching maximum values.

More information

On **www.all-tec-business.net**, click first on the reference and then on the material code to obtain the data sheet of the material.

For special requirements (fluid, temperature, pressure, speed...) or applications approaching maximum values, please contact us. Other materials available: **FPM**, **HNBR**, **TNBR**, **EPDM**...

d	D	L	Reference
35	43	6,3	**10EU 3543**
	43	9	**10EU 3543/1**
	45	7	**10EU 3545/3**
	45	8	**10EU 3545**
	45	11	**10EU 3545/1**
	46	9	**10EU 3546**
	47	9	**10EU 3547**
	50	11	**10EU 3550**
	50	13	**10EU 3550/1**
36	44	6,3	**10EU 3644/1**
	44	9	**10EU 3644**
	46	8	**10EU 3646**
	46	11	**10EU 3646/1**
	48	8	**10EU 3648/1**
	48	9	**10EU 3648**
	48	11	**10EU 3648/2**
	51	11	**10EU 3651**
	51	12,5	**10EU 3651/1**
37	45	6,3	**10EU 3745**
	47	9	**10EU 3747**
38	44	5,3	**10EU 3844**
	45	5,5	**10EU 3845**
	45	7	**10EU 3845/1**
	48	8	**10EU 3848**
39	50	11	**10EU 3950**
40	48	6,3	**10EU 4048**
	48	9	**10EU 4048/1**
	50	7	**10EU 4050/4**
	50	8	**10EU 4050/2**
40	50	10	**10EU 4050**
	50	11	**10EU 4050/1**
	52	9	**10EU 4052**
	55	10	**10EU 4055/2**
	55	11	**10EU 4055**
	55	12,5	**10EU 4055/1**
	56	13	**10EU 4056/1**
	60	13	**10EU 4060**
42	50	6,3	**10EU 4250/1**
	50	7	**10EU 4250**

d	D	L	Reference
44	52	6,3	**10EU 4452**
45	53	6,3	**10EU 4553**
	53	9	**10EU 4553/3**
	53	11	**10EU 4553/2**
	53	13	**10EU 4553/1**
	55	6,3	**10EU 4555/3**
	55	7	**10EU 4555/2**
	55	8	**10EU 4555/1**
	55	11	**10EU 4555**
	58	10	**10EU 4558/1**
	60	10	**10EU 4560/3**
	60	11	**10EU 4560**
	60	12,5	**10EU 4560/1**
	65	13	**10EU 4565**
46	56	8	**10EU 4656**
50	58	9	**10EU 5058**
	60	7	**10EU 5060/3**
	60	8	**10EU 5060/1**
	60	11	**10EU 5060**
	60	13	**10EU 5060/2**
	63	11	**10EU 5063/1**
	65	10	**10EU 5065/2**
	65	11	**10EU 5065/1**
	65	12,5	**10EU 5065**
	68	10	**10EU 5068/1**
	70	13	**10EU 5070**
52	62	11	**10EU 5262**
55	63	8	**10EU 5563**
	63	13	**10EU 5563/1**
	65	7	**10EU 5565/4**
	65	8	**10EU 5565**
	65	11	**10EU 5565/1**
	65	13	**10EU 5565/2**
	67	11	**10EU 5567/1**
	68	11	**10EU 5568**
	70	10	**10EU 5570/2**
	70	11	**10EU 5570**
	70	13	**10EU 5570/1**
	75	13	**10EU 5575**

10EU seals with diameters between 20 and 1500 mm can be manufactured within short delivery time.
For prices and availability: **www.all-tec-business.net**

10EU

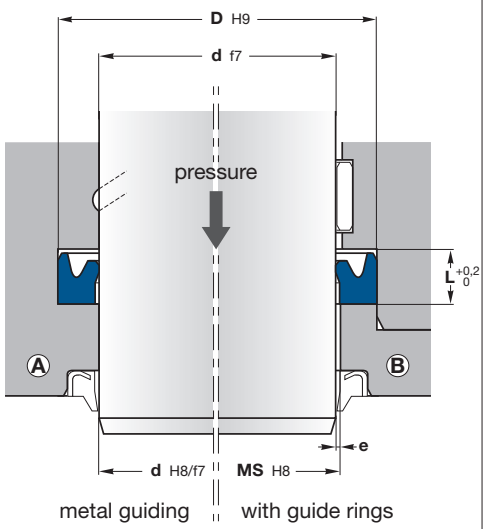

MS = d + 2e

Machining of housings: see pages 48-49

Pressure (MPa)	e (mm)	
	d ≤ 60 mm	**d** > 60 mm
5	≤ 0,4	≤ 0,5
10	≤ 0,3	≤ 0,4
20	≤ 0,2	≤ 0,3
30	≤ 0,15	≤ 0,2
40	≤ 0,1	≤ 0,15

10EU U-ring is a single-acting rod seal with an asymmetrical design. Due to the geometry and material, this seal is exceptionally well-suited for shock pressure peaks and **low friction** in the low pressure range.

Operating conditions	**see page 8**
Pressure	≤ 40 MPa
Temperature	-30°C to 100°C
Speed	≤ 0,5 m/s
Fluids	**see pages 22-45**

Materials	**see pages 10-19**
Seal	Polyurethane

Assembly	**see pages 54-59**
In closed grooves Ⓐ	
In open grooves Ⓑ	

Advantages

- Low friction in the low pressure range
- Excellent abrasion resistance
- Good price-performance ratio
- Simple assembly
- Good resistance to clearance extrusion
- Can be installed as single seal or as secondary seal
- Unaffected by high loads and deflections of the rod

Please contact us for applications approaching maximum values.

More information

On **www.all-tec-business.net**, click first on the reference and then on the material code to obtain the data sheet of the material.

For special requirements (fluid, temperature, pressure, speed...) or applications approaching maximum values, please contact us. Other materials available: **FPM**, **HNBR**, **TNBR**, **EPDM**...

d	D	L	Reference
56	66	7	**10EU 5666/1**
	66	8	**10EU 5666/2**
	66	9	**10EU 5666/3**
	66	11	**10EU 5666**
	71	11	**10EU 5671**
	71	12,5	**10EU 5671/1**
	76	13	**10EU 5676**
	76	16	**10EU 5676/2**
60	68	9	**10EU 6068**
	70	7	**10EU 6070/3**
	70	8	**10EU 6070/1**
	70	11	**10EU 6070**
	70	15	**10EU 6070/S**
	72	9	**10EU 6072**
	72	10	**10EU 6072/1**
	72	11	**10EU 6072/2**
	73	11	**10EU 6073**
	75	10	**10EU 6075/2**
	75	11	**10EU 6075**
	75	13	**10EU 6075/1**
	76	11	**10EU 6076**
	80	14,5	**10EU 6080/1**
63	73	9,6	**10EU 6373/2**
	73	13	**10EU 6373**
	75	9,6	**10EU 6375**
	75	13	**10EU 6375/1**
	78	11	**10EU 6378/1**
	78	12,5	**10EU 6378**
	83	16	**10EU 6383/2**
65	75	7	**10EU 6575/5**
	75	9	**10EU 6575/4**
	75	11	**10EU 6575/3**
	75	13	**10EU 6575/1**
	77	10	**10EU 6577/1**
	78	11	**10EU 6578**
	80	10	**10EU 6580/2**
	80	11	**10EU 6580**
	80	13	**10EU 6580/1**
	85	13	**10EU 6585**

d	D	L	Reference
70	80	6	**10EU 7080/4**
	80	7	**10EU 7080/3**
	80	8	**10EU 7080/2**
	80	11	**10EU 7080/1**
	80	13	**10EU 7080**
	82	9,6	**10EU 7082**
	83	11	**10EU 7083**
	85	10	**10EU 7085/2**
	85	11	**10EU 7085/1**
	85	12,5	**10EU 7085**
	90	16	**10EU 7090/2**
71	81	7	**10EU 7181**
75	85	7	**10EU 7585/2**
	85	8	**10EU 7585**
	85	13	**10EU 7585/1**
	87	9,6	**10EU 7587**
	88	11	**10EU 7588**
	90	10	**10EU 7590/2**
	90	11	**10EU 7590/1**
	90	13	**10EU 7590**
	95	13	**10EU 7595**
78	88	15	**10EU 7888/S**
80	90	7	**10EU 8090/3**
	90	8	**10EU 8090**
	90	13	**10EU 8090/2**
	92	9,6	**10EU 8092**
	93	11	**10EU 8093**
	95	10	**10EU 8095/3**
	95	11	**10EU 8095/2**
	95	12,5	**10EU 8095/1**
	95	12,5	**10EU 8095/1**
	95	13	**10EU 8095**
	100	13	**10EU 80100**
	100	16	**10EU 80100/2**
85	95	8	**10EU 8595**
	97	9,6	**10EU 8597**
	100	10	**10EU 85100/5**
	100	11	**10EU 85100/4**
	100	12	**10EU 85100/1**
	100	13	**10EU 85100**
	105	13	**10EU 85105**

10EU seals with diameters between 20 and 1500 mm can be manufactured within short delivery time.
For prices and availability: **www.all-tec-business.net**

10EU

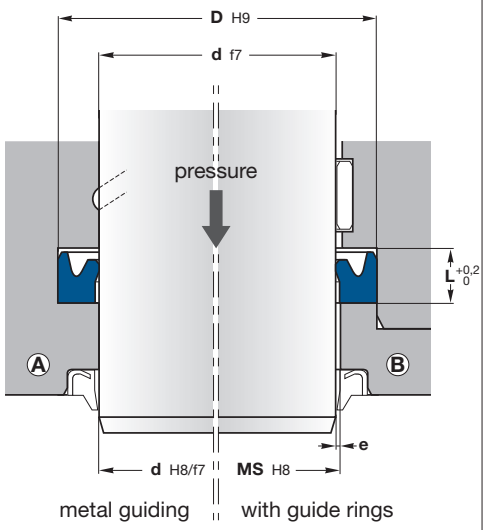

MS = d + 2e

Machining of housings: see pages 48-49

Pressure (MPa)	e (mm)	
	d ≤ 60 mm	**d** > 60 mm
5	≤ 0,4	≤ 0,5
10	≤ 0,3	≤ 0,4
20	≤ 0,2	≤ 0,3
30	≤ 0,15	≤ 0,2
40	≤ 0,1	≤ 0,15

10EU U-ring is a single-acting rod seal with an asymmetrical design. Due to the geometry and material, this seal is exceptionally well-suited for shock pressure peaks and **low friction** in the low pressure range.

Operating conditions	**see page 8**
Pressure	≤ 40 MPa
Temperature	-30°C to 100°C
Speed	≤ 0,5 m/s
Fluids	**see pages 22-45**

Materials	**see pages 10-19**
Seal	Polyurethane

Assembly	**see pages 54-59**
In closed grooves Ⓐ	
In open grooves Ⓑ	

Advantages

- Low friction in the low pressure range
- Excellent abrasion resistance
- Good price-performance ratio
- Simple assembly
- Good resistance to clearance extrusion
- Can be installed as single seal or as secondary seal
- Unaffected by high loads and deflections of the rod

Please contact us for applications approaching maximum values.

More information

On **www.all-tec-business.net**, click first on the reference and then on the material code to obtain the data sheet of the material.

For special requirements (fluid, temperature, pressure, speed...) or applications approaching maximum values, please contact us. Other materials available: **FPM**, **HNBR**, **TNBR**, **EPDM**...

d	D	L	Reference
90	100	12,5	**10EU 90100/1**
	102	9,6	**10EU 90102**
	105	9,5	**10EU 90105/2**
	105	11	**10EU 90105/5**
	105	12,5	**10EU 90105/3**
	105	13	**10EU 90105**
	110	13	**10EU 90110**
	110	16	**10EU 90110/1**
95	105	11	**10EU 95105/1**
	110	10	**10EU 95110/1**
	110	11	**10EU 95110**
	115	13	**10EU 95115**
99	109	15	**10EU 99109/S**
100	110	15	**10EU 100110/1**
	115	10	**10EU 100115/3**
	115	11	**10EU 100115/1**
	115	11,5	**10EU 100115/2**
	115	13	**10EU 100115**
	120	13	**10EU 100120**
	120	16	**10EU 100120/2**
	125	20	**10EU 100125**
105	115	11	**10EU 105115/1**
	120	11	**10EU 105120**
	125	13	**10EU 105125**
110	125	11	**10EU 110125/2**
	125	12	**10EU 110125/1**
	125	16	**10EU 110125**
	130	13	**10EU 110130**
	130	16	**10EU 110130/1**
115	130	12	**10EU 115130/1**
	135	13	**10EU 115135**
120	130	8	**10EU 120130/1**
	130	12,5	**10EU 120130/2**
	130	15	**10EU 120130/S**
	135	12,5	**10EU 120135/1**
	140	13	**10EU 120140**
	140	16	**10EU 120140/1**

d	D	L	Reference
125	135	14	**10EU 125135**
	145	13	**10EU 125145**
	145	16	**10EU 125145/1**
	150	15	**10EU 125150**
130	145	15	**10EU 130145/2**
	150	13	**10EU 130150**
	150	16	**10EU 130150/1**
140	150	12,5	**10EU 140150/1**
	160	16	**10EU 140160/2**
141	151	15	**10EU 141151/S**
150	170	14,5	**10EU 150170/1**
	170	16	**10EU 150170/2**
	170	17	**10EU 150170/3**
160	180	13	**10EU 160180**
	180	16	**10EU 160180/1**
	185	20	**10EU 160185**
162	172	15	**10EU 162172/S**
170	190	16	**10EU 170190/1**
180	200	16	**10EU 180200/1**
183	193	15	**10EU 183193/S**
190	210	16	**10EU 190210/1**
200	220	13	**10EU 200220**
	220	16	**10EU 200220/1**
207	217	15	**10EU 207217/S**
210	230	16	**10EU 210230/2**
220	240	16	**10EU 220240/1**
240	260	16	**10EU 240260/1**
	270	19	**10EU 240270**
250	270	16	**10EU 250270/1**

10EU seals with diameters between 20 and 1500 mm can be manufactured within short delivery time.
For prices and availability: **www.all-tec-business.net**

ALL-TEC SEALING SYSTEMS

10EU.../ET

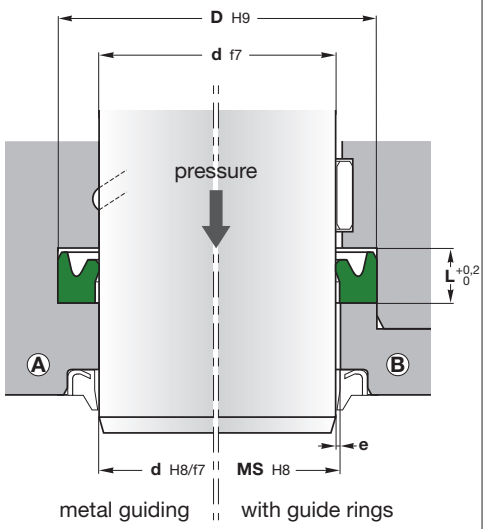

MS = d + 2e

Machining of housings: see pages 48-49

Pressure (MPa)	e (mm)	
	d ≤ 60 mm	**d** > 60 mm
5	≤ 0,4	≤ 0,5
10	≤ 0,3	≤ 0,4
20	≤ 0,2	≤ 0,3
30	≤ 0,15	≤ 0,2
40	≤ 0,1	≤ 0,15

10EU.../ET U-ring is a single-acting rod seal with an asymmetrical design. Due to the geometry and material, this seal is exceptionally well-suited for shock pressure peaks and **low friction** in the low pressure range.

Suitable for high and low ranges of temperatures.

This seal can be used for cylinders exposed to high temperature **painting processes**.

Operating conditions	**see page 8**
Pressure	≤ 40 MPa
Temperature	-40°C to 130°C
Speed	≤ 0,5 m/s
Fluids	**see pages 22-45**

Materials	**see pages 10-19**
Seal	PU33

Assembly	**see pages 54-59**
In closed grooves Ⓐ	
In open grooves Ⓑ	

Advantages

- Very large range of temperatures
- Low friction in the low pressure range
- Excellent abrasion resistance
- Good price-performance ratio
- Simple assembly
- Good resistance to clearance extrusion
- Can be installed as single seal or as secondary seal
- Unaffected by high loads and deflections of the rod

Please contact us for applications approaching maximum values.

More information

On **www.all-tec-business.net**, click first on the reference and then on the material code to obtain the data sheet of the material.

d	D	L	Reference
20	28	6,3	**10EU 2028/ET**
22	30	6,3	**10EU 2230/1/ET**
25	33	6,3	**10EU 2533/ET**
	35	8	**10EU 2535/ET**
28	36	6,3	**10EU 2836/ET**
	38	8	**10EU 2838/ET**
30	38	6,3	**10EU 3038/ET**
	38	8	**10EU 3038/2/ET**
	40	8	**10EU 3040/ET**
	40	11	**10EU 3040/1-ET**
32	40	6,3	**10EU 3240/1/ET**
35	43	6,3	**10EU 3543/ET**
	45	8	**10EU 3545/ET**
36	44	6,3	**10EU 3644/1/ET**
	46	8	**10EU 3646/ET**
40	48	6,3	**10EU 4048/ET**
	50	8	**10EU 4050/2/ET**
45	55	8	**10EU 4555/1/ET**
50	60	8	**10EU 5060/1/ET**
	65	12,5	**10EU 5065/ET**
55	65	8	**10EU 5565/ET**
56	66	8	**10EU 5666/2/ET**
60	70	8	**10EU 6070/1/ET**
	75	12,5	**10EU 6075/1/ET**
70	85	12,5	**10EU 7085/ET**
80	95	12,5	**10EU 8095/1/ET**
90	105	12,5	**10EU 90105/3/ET**
125	145	16	**10EU 125145/1/ET**
180	200	16	**10EU 180200/1/ET**

For special requirements (fluid, temperature, pressure, speed...) or applications approaching maximum values, please contact us. Other materials available: **FPM**, **HNBR**, **TNBR**, **EPDM**...

10EU.../ET seals with diameters between 20 and 1500 mm can be manufactured within short delivery time.
For prices and availability: **www.all-tec-business.net**

ALL-TEC SEALING SYSTEMS

10EU/I

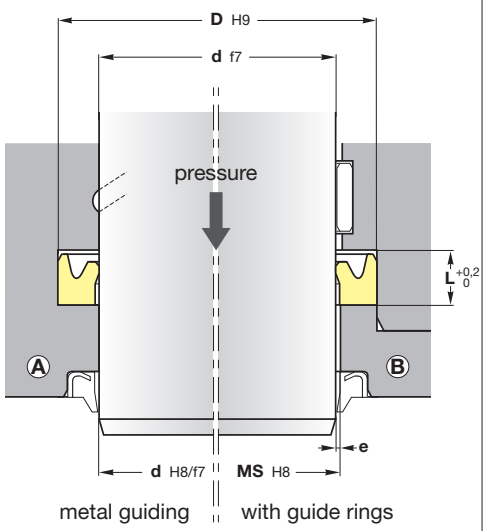

MS = d + 2e

Machining of housings: see pages 48-49

Pressure (MPa)	e (mm)	
	d ≤ 60 mm	**d** > 60 mm
5	≤ 0,4	≤ 0,5
10	≤ 0,3	≤ 0,4
20	≤ 0,2	≤ 0,3
30	≤ 0,15	≤ 0,2
40	≤ 0,1	≤ 0,15

10EU/I rod U-rings are designed for rod applications in inch dimensions.

Thanks to endurance grade special PU material, **10EU/I** rod U-rings can be safely used in heavy duty applications.

Operating conditions	**see page 8**
Pressure	≤ 40 MPa
Temperature	-30°C to 100°C
Speed	≤ 0,5 m/s
Fluids	**see pages 22-45**

Materials	**see pages 10-19**
Seal	Polyurethane

Assembly	**see pages 54-59**
In closed grooves Ⓐ	
In open grooves Ⓑ	

Advantages

- Low friction in the low pressure range
- Excellent abrasion resistance
- Good price-performance ratio
- Simple assembly
- Good resistance to clearance extrusion
- Can be installed as single seal or as secondary seal
- Unaffected by high loads and deflections of the rod

Please contact us for applications approaching maximum values.

More information

On **www.all-tec-business.net**, click first on the reference and then on the material code to obtain the data sheet of the material.

d	D	L	Reference
19,05	25,4	3,5	**10EU/I 075100**
	25,4	7	**10EU/I 075100/1**
25,4	31,75	7	**10EU/I 100125**
31,75	41,22	8,7	**10EU/I 125162**
34,92	44,45	8,7	**10EU/I 137175**
38,1	47,62	8,7	**10EU/I 150187**
41,27	50,8	8,7	**10EU/I 162200/1**
	50,8	10,5	**10EU/I 162200**
44,45	53,97	10,5	**10EU/I 175212**
50,8	60,32	10,5	**10EU/I 200237**
	63,5	10,5	**10EU/I 200250**
57,15	66,67	10,5	**10EU/I 225262**
	69,85	10,5	**10EU/I 225275**
60,33	73,03	10,5	**10EU/I 237287**
63,5	76,2	10,5	**10EU/I 250300**
69,85	82,55	10,5	**10EU/I 275325**
76,2	88,9	10,5	**10EU/I 300350**
82,55	95,25	10,5	**10EU/I 325375**
88,9	101,6	10,5	**10EU/I 350400**
95,25	107,95	10,5	**10EU/I 375425**
101,6	114,3	10,5	**10EU/I 400450**
	117,47	10,5	**10EU/I 400462**
114,3	130,18	10,5	**10EU/I 450512**
	133,35	17,5	**10EU/I 450525**

For special requirements (fluid, temperature, pressure, speed...) or applications approaching maximum values, please contact us. Other materials available: **FPM**, **HNBR**, **TNBR**, **EPDM**...

10EU/I seals with diameters between 20 and 1500 mm can be manufactured within short delivery time.
For prices and availability: **www.all-tec-business.net**

10RS.../L

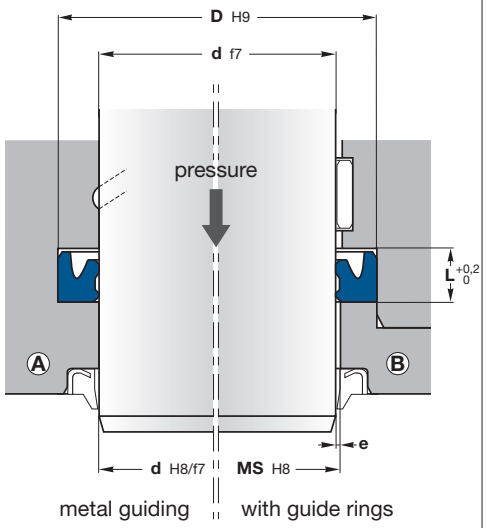

MS = d + 2e

Machining of housings: see pages 48-49

Pressure (MPa)	e (mm)	
	d ≤ 60 mm	**d** > 60 mm
5	≤ 0,4	≤ 0,5
10	≤ 0,3	≤ 0,4
20	≤ 0,2	≤ 0,3
30	≤ 0,15	≤ 0,2
40	≤ 0,1	≤ 0,15

10RS.../L rod U-rings, that have shorter inner sealing lips, are produced for rod applications.

They ensure lower oil film thickness due to their second dynamic sealing lip. At the same time, they prevent the entry of foreign particles into the cylinder.

Operating conditions	see page 8
Pressure	≤ 40 MPa
Temperature	-30°C to 100°C
Speed	≤ 0,5 m/s
Fluids	see pages 22-45

Materials	see pages 10-19
Seal	Polyurethane

Assembly	see pages 54-59
In closed grooves Ⓐ	
In open grooves Ⓑ	

Advantages

- Low friction
- Excellent abrasion resistance
- Good price-performance ratio
- Small cross-section
- Simple assembly
- Good resistance to clearance extrusion
- Unaffected by high loads and deflections of the rod

Please contact us for applications approaching maximum values.

More information

On **www.all-tec-business.net**, click first on the reference and then on the material code to obtain the data sheet of the material.

For special requirements (fluid, temperature, pressure, speed...) or applications approaching maximum values, please contact us. Other materials available: **FPM**, **HNBR**, **TNBR**, **EPDM**...

d	D	L	Reference
5	10	4	**10RS 510/L**
6	11	4	**10RS 611/L**
	13	5,6	**10RS 613/L**
7	12	4,5	**10RS 712/L**
12	19	5,6	**10RS 1219/L**
	22	8	**10RS 1222/L**
	22	9	**10RS 1222/L1**
14	20	6,3	**10RS 1420/L**
	21	6	**10RS 1421/L**
	24	8	**10RS 1424/L**
15	21	5	**10RS 1521/L**
	26	8	**10RS 1526/L**
18	25	6	**10RS 1825/L**
	26	6,3	**10RS 1826/L2**
	26	7	**10RS 1826/L1**
	26	9	**10RS 1826/L**
	28	8	**10RS 1828/L**
19,5	27,5	9	**10RS 1927/L**
20	26	5,5	**10RS 2026/L**
	28	6,3	**10RS 2028/L**
	28	7	**10RS 2028/L2**
	30	8	**10RS 2030/L**
22	29	5,6	**10RS 2229/L**
	32	8	**10RS 2232/L**
25	33	6,3	**10RS 2533/L3**
	33	7	**10RS 2533/L2**
	33	7,5	**10RS 2533/L1**
	33	7,5	**10RS 2533/L1-ET**
	33	8	**10RS 2533/L**
	35	8	**10RS 2535/L**
26	36	11	**10RS 2636/L**
28	36	6,3	**10RS 2836/L**
	36	8	**10RS 2836/L1**
	38	8	**10RS 2838/L2**
	38	9	**10RS 2838/L1**
	43	12,5	**10RS 2843/L**

d	D	L	Reference
30	38	6,3	**10RS 3038/L1**
	38	12,5	**10RS 3038/L**
	40	7,5	**10RS 3040/L1**
	40	8	**10RS 3040/L**
32	40	7	**10RS 3240/L**
	40	7	**10RS 3240/L1**
	40	7,7	**10RS 3240/L**
	41,5	8,9	**10RS 3241/L**
	42	8	**10RS 3242/L**
	42	11	**10RS 3242/L1**
35	42	8	**10RS 3542/L**
	43	6,3	**10RS 3543/L1**
	43	8	**10RS 3543/L**
	45	8	**10RS 3545/L**
	45	11	**10RS 3545/L1**
36	43	12,5	**10RS 3643/L**
	44	6,3	**10RS 3644/L1**
	44	7	**10RS 3644/L**
	46	8	**10RS 3646/L1**
	46	11	**10RS 3646/L2**
38	46	12,5	**10RS 3846/L**
	48	9	**10RS 3848/L**
	48	11	**10RS 3848/L1**
40	48	6,3	**10RS 4048/L1**
	48	12,5	**10RS 4048/L**
	50	8	**10RS 4050/L**
	50	11	**10RS 4050/L1**
	55	11	**10RS 4055/L**
	55	11	**10RS 4055/L**
	55	12,5	**10RS 4055/L1**
	60	13	**10RS 4060/L**
42	50	12,5	**10RS 4250/L**
	53	10	**10RS 4253/L**
43	53	11	**10RS 4353/L**
45	53	12,5	**10RS 4553/L**
	55	6,3	**10RS 4555/L2**
	55	8	**10RS 4555/L1**
	55	12,5	**10RS 4555/L**
	60	12,5	**10RS 4560/L**

10RS.../L seals with diameters between 20 and 1500 mm can be manufactured within short delivery time.
For prices and availability: **www.all-tec-business.net**

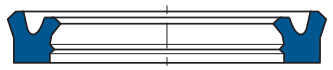

10RS.../L

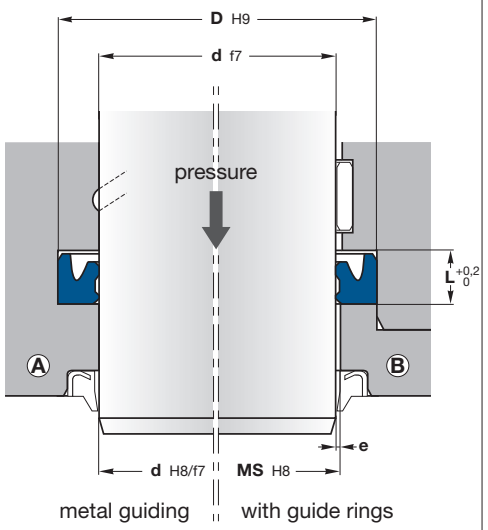

MS = d + 2e

Machining of housings: see pages 48-49

Pressure (MPa)	e (mm)	
	d ≤ 60 mm	**d** > 60 mm
5	≤ 0,4	≤ 0,5
10	≤ 0,3	≤ 0,4
20	≤ 0,2	≤ 0,3
30	≤ 0,15	≤ 0,2
40	≤ 0,1	≤ 0,15

10RS.../L rod U-rings, that have shorter inner sealing lips, are produced for rod applications.

They ensure lower oil film thickness due to their second dynamic sealing lip. At the same time, they prevent the entry of foreign particles into the cylinder.

Operating conditions	see page 8
Pressure	≤ 40 MPa
Temperature	-30°C to 100°C
Speed	≤ 0,5 m/s
Fluids	see pages 22-45

Materials	see pages 10-19
Seal	Polyurethane

Assembly	see pages 54-59
In closed grooves Ⓐ	
In open grooves Ⓑ	

Advantages

- Low friction
- Excellent abrasion resistance
- Good price-performance ratio
- Small cross-section
- Simple assembly
- Good resistance to clearance extrusion
- Unaffected by high loads and deflections of the rod

Please contact us for applications approaching maximum values.

More information

On **www.all-tec-business.net**, click first on the reference and then on the material code to obtain the data sheet of the material.

For special requirements (fluid, temperature, pressure, speed...) or applications approaching maximum values, please contact us. Other materials available: **FPM**, **HNBR**, **TNBR**, **EPDM**...

d	D	L	Reference
46	56	11	**10RS 4656/L**
48	56	12,5	**10RS 4856/L1**
50	57	11	**10RS 5057/L**
	58	12,5	**10RS 5058/L**
	60	8	**10RS 5060/L**
	60	8	**10RS 5060/L**
	60	8	**10RS 5060/L/ET**
	60	11	**10RS 5060/L1**
	65	11	**10RS 5065/L1**
55	63	12,5	**10RS 5563/L**
	65	8	**10RS 5565/L2**
	65	9,5	**10RS 5565/L1**
	65	11	**10RS 5565/L**
56	71	12,5	**10RS 5671/L**
60	68	12,5	**10RS 6068/L**
	70	7	**10RS 6070/L3**
	70	8	**10RS 6070/L4**
	70	11	**10RS 6070/L5**
	70	12,5	**10RS 6070/L**
	72	10	**10RS 6072/L**
	75	11	**10RS 6075/L1**
	75	12,5	**10RS 6075/L2**
	75	16,5	**10RS 6075/L**
63	71	12,5	**10RS 6371/L**
	78	12,5	**10RS 6378/L**
	78	12,5	**10RS 6378/L**
	83	14,5	**10RS 6383/L**
65	73	12,5	**10RS 6573/L**
	75	11	**10RS 6575/L**
	75	12,5	**10RS 6575/L1**
	80	12,5	**10RS 6580/L**
66	80	11	**10RS 6680/L**
67	75	12,5	**10RS 6775/L**

d	D	L	Reference
70	78	12,5	**10RS 7078/L**
	80	12,5	**10RS 7080/L**
	82	9,6	**10RS 7082/L**
	85	12,5	**10RS 7085/L**
	85	12,5	**10RS 7085/L**
	90	13	**10RS 7090/L**
73	82,4	7,8	**10RS 7382/L**
75	83	12,5	**10RS 7583/L**
	85	9,5	**10RS 7585/L1**
	85	11	**10RS 7585/L2**
	85	12,5	**10RS 7585/L**
78	86	12,5	**10RS 7886/L1**
80	88	12,5	**10RS 8088/L**
	90	8	**10RS 8090/L**
	90	11	**10RS 8090/L1**
	90	12,5	**10RS 8090/L2**
	90	13	**10RS 8090/L3**
	95	12,5	**10RS 8095/L**
	100	13	**10RS 80100/L**
85	93	11	**10RS 8593/L1**
	93	12,5	**10RS 8593/L**
	100	12,5	**10RS 85100/L**
87	95	12,5	**10RS 8795/L**
89	97	12,5	**10RS 8997/L**
90	98	12,5	**10RS 9098/L**
	100	8	**10RS 90100/L2**
	100	10	**10RS 90100/L1**
	100	12,5	**10RS 90100/L**
	105	12,5	**10RS 90105/L**
	110	13	**10RS 90110/L**
	110	15	**10RS 90110/L2**
	110	16	**10RS 90110/L1**
93	101	12,5	**10RS 93101/L**
95	103	12,5	**10RS 95103/L**
	105	13	**10RS 95105/L**

10RS.../L seals with diameters between 20 and 1500 mm can be manufactured within short delivery time.
For prices and availability: **www.all-tec-business.net**

10RS.../L

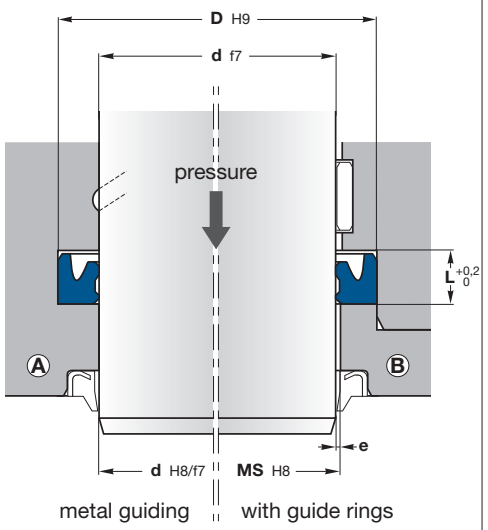

MS = d + 2e

Machining of housings: see pages 48-49

Pressure (MPa)	e (mm)	
	d ≤ 60 mm	**d** > 60 mm
5	≤ 0,4	≤ 0,5
10	≤ 0,3	≤ 0,4
20	≤ 0,2	≤ 0,3
30	≤ 0,15	≤ 0,2
40	≤ 0,1	≤ 0,15

10RS.../L rod U-rings, that have shorter inner sealing lips, are produced for rod applications.

They ensure lower oil film thickness due to their second dynamic sealing lip. At the same time, they prevent the entry of foreign particles into the cylinder.

Operating conditions	**see page 8**
Pressure	≤ 40 MPa
Temperature	-30°C to 100°C
Speed	≤ 0,5 m/s
Fluids	**see pages 22-45**

Materials	**see pages 10-19**
Seal	Polyurethane

Assembly	**see pages 54-59**
In closed grooves Ⓐ	
In open grooves Ⓑ	

Advantages

- Low friction
- Excellent abrasion resistance
- Good price-performance ratio
- Small cross-section
- Simple assembly
- Good resistance to clearance extrusion
- Unaffected by high loads and deflections of the rod

Please contact us for applications approaching maximum values.

More information

On **www.all-tec-business.net**, click first on the reference and then on the material code to obtain the data sheet of the material.

For special requirements (fluid, temperature, pressure, speed...) or applications approaching maximum values, please contact us. Other materials available: **FPM**, **HNBR**, **TNBR**, **EPDM**...

d	D	L	Reference
97	105	12,5	**10RS 97105/L1**
	106	15	**10RS 97106/L**
100	108	12,5	**10RS 100108/L**
	110	11	**10RS 100110/L1**
	110	12,5	**10RS 100110/L**
	115	11	**10RS 100115/L**
	115	13	**10RS 100115/L1**
	120	13	**10RS 100120/L1**
	120	16	**10RS 100120/L2**
105	113	12,5	**10RS 105113/L1**
	115	12,5	**10RS 105115/L**
108	116	12,5	**10RS 108116/L**
110	118	12,5	**10RS 110118/L**
	120	11,5	**10RS 110120/L**
	125	10,6	**10RS 110125/L**
	130	16	**10RS 110130/L**
115	123	12,5	**10RS 115123/L**
	125	13	**10RS 115125/L1**
118	126	12,5	**10RS 118126/L1**
120	128	12,5	**10RS 120128/L**
	130	12,5	**10RS 120130/L**
	140	16	**10RS 120140/L1**
125	133	12,5	**10RS 125133/L**
	135	11	**10RS 125135/L**
	145	16	**10RS 125145/L1**
	150	20	**10RS 125150/L**
127	140	12,5	**10RS 127140/L**
128	136	12,5	**10RS 128136/L**
130	138	12,5	**10RS 130138/L**
	150	16	**10RS 130150/L1**

d	D	L	Reference
135	143	12,5	**10RS 135143/L**
	150	12,5	**10RS 135150/L**
	150	16	**10RS 135150/L1**
140	148	12,5	**10RS 140148/L**
	150	12,5	**10RS 140150/L**
	155	10,6	**10RS 140155/L**
	160	16	**10RS 140160/L**
143	151	12,5	**10RS 143151/L1**
145	153	12,5	**10RS 145153/L**
	155	13	**10RS 145155/L**
	160	13	**10RS 145160/L**
148	160	13	**10RS 148160/L**
150	170	16	**10RS 150170/L**
152	160	12,5	**10RS 152160/L**
	162	11	**10RS 152162/L**
155	163	12,5	**10RS 155163/L**
160	168	12,5	**10RS 160168/L**
	170	12,5	**10RS 160170/L**
170	178	12,5	**10RS 170178/L**
	180	13	**10RS 170180/L**
	190	16	**10RS 170190/L**
171	179	12,5	**10RS 171179/L**
180	190	11	**10RS 180190/L**
	195	13,5	**10RS 180195/L**
	200	16	**10RS 180200/L**
	205	16	**10RS 180205/L**
200	225	16	**10RS 200225/L**
202	212	14,5	**10RS 202212/L**
205	220	13,5	**10RS 205220/L**
212	220	14,5	**10RS 212220/L**

10RS.../L seals with diameters between 20 and 1500 mm can be manufactured within short delivery time.
For prices and availability: **www.all-tec-business.net**

12TDT

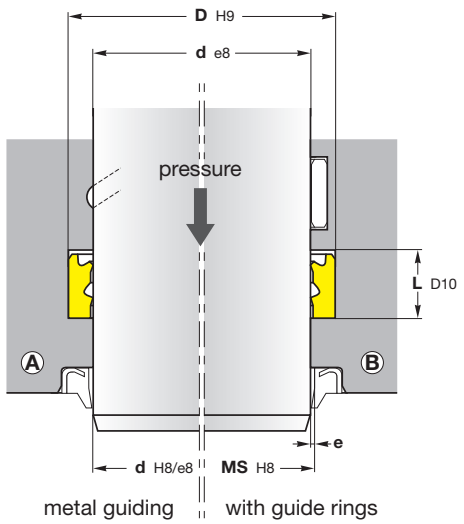

MS = d + 2e

Machining of housings: see pages 48-49

d (mm)	e (mm)	
	< 10 MPa	10 - 36 MPa
< 96	≤ 0,3	≤ 0,25
96 - 205	≤ 0,35	≤ 0,25
> 205	≤ 0,4	≤ 0,25

12TDT rod U-rings, that have two sealing lips on the inside, are produced for telescopic cylinders.

They ensure lower oil film thickness due to their second dynamic sealing lip. At the same time, they prevent the entry of foreign particles into the cylinder.

Operating conditions	see page 8
Pressure	≤ 36 MPa
Temperature	-35°C to 100°C
Speed	≤ 1 m/s
Fluids	see pages 22-45

Materials	see pages 10-19
Seal	polyurethane

Assembly	see pages 54-59
In closed grooves	

Advantages

- Low friction
- Excellent abrasion resistance
- Good price-performance ratio
- Suitable for telescopic cylinders
- Simple assembly
- Good resistance to clearance extrusion
- Unaffected by high loads and deflections of the rod

Please contact us for applications approaching maximum values.

More information

On **www.all-tec-business.net**, click first on the reference and then on the material code to obtain the data sheet of the material.

For special requirements (fluid, temperature, pressure, speed...) or applications approaching maximum values, please contact us. Other materials available: **FPM**, **HNBR**, **TNBR**, **EPDM**...

d	D	L	HUNGER reference	Reference
52	60	12	019601	**12TDT 52**
63	71	12	019602	**12TDT 63**
75	83	12	010203	**12TDT 75**
87	95	12	010235	**12TDT 87**
108	116	12	019605	**12TDT 108**
125	137	12	019631	**12TDT 125**
138	146	12	010249	**12TDT 138**
145	153	12	010253	**12TDT 145**
166	174	12	010258	**12TDT 166**
170	178	12	019609	**12TDT 170**
200	208	12	010263	**12TDT 200**

Further dimensions on request

For prices and availability: **www.all-tec-business.net**

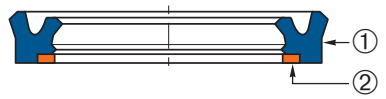

10RS.../LA

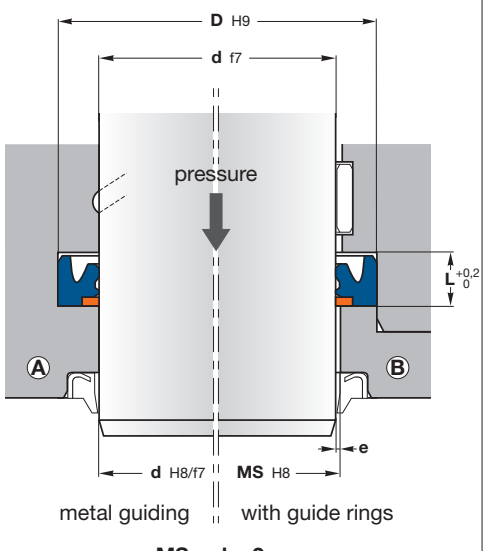

MS = d + 2e

Machining of housings: see pages 48-49

Pressure (MPa)	e (mm)	
	d ≤ 60 mm	**d** > 60 mm
5	≤ 0,6	≤ 0,8
10	≤ 0,6	≤ 0,8
20	≤ 0,4	≤ 0,6
30	≤ 0,3	≤ 0,4
40	≤ 0,2	≤ 0,3
50	≤ 0,1	≤ 0,15

10RS.../LA rod U-rings, that have shorter inner sealing lips, are produced for rod applications.

They ensure lower oil film thickness due to the their second dynamic sealing lip. At the same time, they prevent the entry of foreign particles into the cylinder.

POM back-up rings offer high resistance to extrusion.

Operating conditions	see page 8
Pressure	≤ 50 MPa
Temperature	-30°C to 100°C
Speed	≤ 0,5 m/s
Fluids	see pages 22-45

Materials	see pages 10-19
Seal ①	Polyurethane
Anti-extrusion ring ②	Acetal resin (POM)

Assembly	see pages 54-59
In closed grooves Ⓐ	
In open grooves Ⓑ	

Advantages

- Low friction
- Excellent abrasion resistance
- Good price-performance ratio
- Small cross-section
- Simple assembly
- Good resistance to clearance extrusion
- Unaffected by high loads and deflections of the rod
- The integrated anti-extrusion ring prevents the seal material from extrusion at higher pressure

Please contact us for applications approaching maximum values.

More information

On **www.all-tec-business.net**, click first on the reference and then on the material code to obtain the data sheet of the different materials.

For special requirements (fluid, temperature, pressure, speed...) or applications approaching maximum values, please contact us. Other materials available: **FPM**, **HNBR**, **TNBR**, **EPDM**...

d	D	L	Reference
40	55	11	**10RS 4055/LA**
42	51	11	**10RS 4251/LA**
50	59	11	**10RS 5059/LA**
	60	8	**10RS 5060/LA**
	60	8	**10RS 5060/LA**
	65	11	**10RS 5065/LA**
	65	12,5	**10RS 5065/LA2**
	70	13	**10RS 5070/LA**
60	68	14	**10RS 6068/LA**
	69	11	**10RS 6069/LA**
	80	13	**10RS 6080/LA**
63	78	12,5	**10RS 6378/LA**
	83	13	**10RS 6383/LA**
70	80	8	**10RS 7080/LA**
	85	12,5	**10RS 7085/LA**
78	86	14	**10RS 7886/LA**
80	95	12,5	**10RS 8095/LA**
85	105	13	**10RS 85105/LA**
	105	14,5	**10RS 85105/LA1**
97	105	14	**10RS 97105/LA**
100	115	16	**10RS 100115/LA**
	120	14,5	**10RS 100120/LA**

d	D	L	Reference
105	125	13	**10RS 105125/LA**
110	125	16	**10RS 110125/LA**
	130	13	**10RS 110130/LA1**
118	126	14	**10RS 118126/LA**
120	140	13	**10RS 120140/LA**
125	145	13	**10RS 125145/LA**
130	145	16	**10RS 130145/LA**
140	160	16	**10RS 140160/LA**
143	151	14	**10RS 143151/LA**
	151	14,5	**10RS 143151/LA**
150	165	16	**10RS 150165/LA**
160	175	16	**10RS 160175/LA**
170	185	16	**10RS 170185/LA**
180	195	12,5	**10RS 180195/LA**
200	220	16	**10RS 200220/LA**

10RS.../LA seals with diameters between 20 and 1500 mm can be manufactured within short delivery time.
For prices and availability: **www.all-tec-business.net**

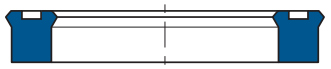

10TS

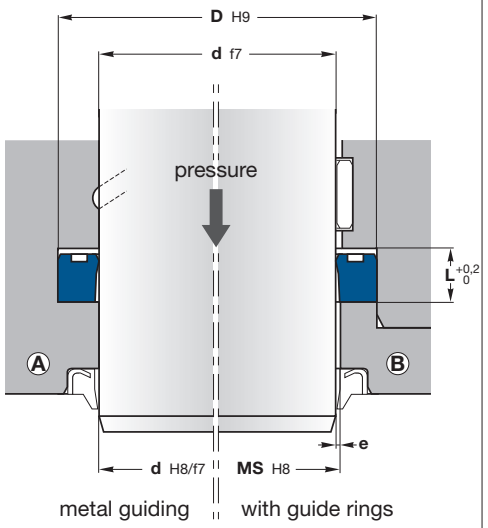

MS = d + 2e

Machining of housings: see pages 48-49

Pressure (MPa)	e (mm)	
	d ≤ 60 mm	**d** > 60 mm
5	≤ 0,4	≤ 0,5
10	≤ 0,3	≤ 0,4
20	≤ 0,2	≤ 0,3
30	≤ 0,15	≤ 0,2
40	≤ 0,1	≤ 0,15

10TS compact rod seals can be used for rod applications thanks to their sealing lip design.

The compact form provides a high sealing effect even at low pressures.

10TS compact rod seals, which have an impressive price-performance ratio, are produced using the standard PU materials.

Operating conditions	**see page 8**
Pressure	≤ 40 MPa
Temperature	-30°C to 100°C
Speed	≤ 0,5 m/s
Fluids	**see pages 22-45**

Materials	**see pages 10-19**
Seal	Polyurethane

Assembly	**see pages 54-59**
In closed grooves Ⓐ	
In open grooves Ⓑ	

Advantages

- Excellent abrasion resistance
- Efficient sealing at low and high pressures
- Suitable for telescopic cylinders
- Suitable for small grooves
- Unaffected by sudden loads
- Do not use with double acting wipers without a drain hole between wiper and seal

Please contact us for applications approaching maximum values.

More information

On **www.all-tec-business.net**, click first on the reference and then on the material code to obtain the data sheet of the material.

For special requirements (fluid, temperature, pressure, speed...) or applications approaching maximum values, please contact us. Other materials available: **FPM**, **HNBR**, **TNBR**, **EPDM**...

d	D	L	Reference
8	13	4,5	**10TS 0813**
12	18	5	**10TS 1218**
14	19	4	**10TS 1419**
	19	5,3	**10TS 1419/1**
16	22	4,5	**10TS 1622**
	24	7	**10TS 1624/1**
18	25	5,7	**10TS 1825**
20	25	4,5	**10TS 2025/1**
	30	8	**10TS 2030**
	30	11	**10TS 2030/2**
22	28	5	**10TS 2228**
	32	9	**10TS 2232/1**
25	32	5	**10TS 2532**
	33	6,3	**10TS 2533**
	35	6	**10TS 2535**
30	38	7	**10TS 3038/4**
	38	9	**10TS 3038**
	40	8	**10TS 3040/1**
32	40	9	**10TS 3240**
	42	9	**10TS 3242/1**

d	D	L	Reference
35	45	8	**10TS 3545**
38	45	7	**10TS 3845**
45	53	7	**10TS 4553/1**
56	66	7,5	**10TS 5666/1**
	66	11	**10TS 5666**
60	70	13	**10TS 6070/3**
63	71	9	**10TS 6371**
66	80	11	**10TS 6680**
70	80	13	**10TS 7080/2**
76	84	9	**10TS 7684**
118	126	14	**10TS 118126**
120	130	6	**10TS 120130**
147	155	11	**10TS 147155**
175	183,5	9	**10TS 175183**
221	229,5	13	**10TS 221229**
249	257,5	13	**10TS 249257**
277	285,5	13	**10TS 277285**

10TS seals with diameters between 20 and 1500 mm can be manufactured within short delivery time.
For prices and availability: **www.all-tec-business.net**

10TS.../L

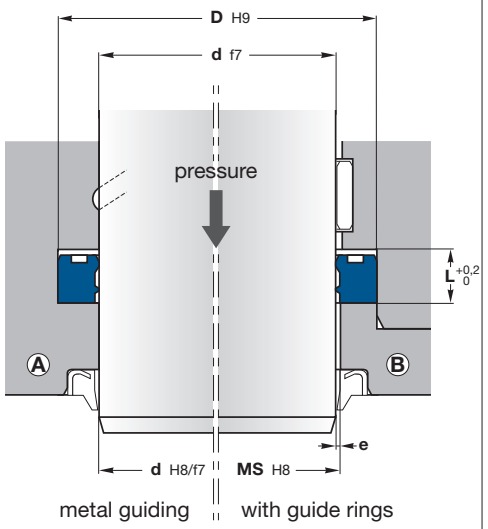

MS = d + 2e

Machining of housings: see pages 48-49

Pressure (MPa)	e (mm)	
	d ≤ 60 mm	**d** > 60 mm
5	≤ 0,4	≤ 0,5
10	≤ 0,3	≤ 0,4
20	≤ 0,2	≤ 0,3
30	≤ 0,15	≤ 0,2
40	≤ 0,1	≤ 0,15

10TS.../L compact rod seals can be used for rod applications thanks to their sealing lip design.

The compact form provides a high sealing effect even with low pressures.

With a wide range of dimensions available, **10TS.../L** compact rod seals, which have an impressive price-performance ratio, are produced using the standard PU materials.

Operating conditions	**see page 8**
Pressure	≤ 40 MPa
Temperature	-30°C to 100°C
Speed	≤ 0,5 m/s
Fluids	**see pages 22-45**

Materials	**see pages 10-19**
Seal	Polyurethane

Assembly	**see pages 54-59**
In closed grooves Ⓐ	
In open grooves Ⓑ	

Advantages

- Excellent abrasion resistance
- Efficient sealing at low and high pressures
- Suitable for telescopic cylinders
- Suitable for small grooves
- Unaffected by sudden loads
- Do not use with double acting wipers without a drain hole between wiper and seal

Please contact us for applications approaching maximum values.

More information

On **www.all-tec-business.net**, click first on the reference and then on the material code to obtain the data sheet of the material.

For special requirements (fluid, temperature, pressure, speed...) or applications approaching maximum values, please contact us. Other materials available: **FPM**, **HNBR**, **TNBR**, **EPDM**...

d	D	L	Reference
6	10	4,5	**10TS 0610/L1**
	14	6,3	**10TS 0614/L**
8	14	6,3	**10TS 0814/L1**
	15	6,3	**10TS 0815/L**
	16	6,3	**10TS 0816/L**
10	16	5,4	**10TS 1016/L**
	18	6,3	**10TS 1018/L**
12	19	6,3	**10TS 1219/L**
	20	6,3	**10TS 1220/L**
	23	7,5	**10TS 1223/L**
14	20	5,3	**10TS 1420/L**
	21	6	**10TS 1421/L**
	22	6,3	**10TS 1422/L**
15	21,5	5	**10TS 1521/L**
	23	7	**10TS 1523/L**
16	22	5,5	**10TS 1622/L2**
	22	6	**10TS 1622/L1**
	24	6,3	**10TS 1624/L**
18	22	4,5	**10TS 1822/L**
	24	5,2	**10TS 1824/L**
	25	5,7	**10TS 1825/L**
	26	6,3	**10TS 1826/L**
	26	9	**10TS 1826/L1**
	28	6,3	**10TS 1828/L**
	28	8	**10TS 1828/L1**
20	26	6	**10TS 2026/L**
	27	6,5	**10TS 2027/L**
	28	6,3	**10TS 2028/L**
	28	8	**10TS 2028/L1**
	30	5	**10TS 2030/L3**
	30	8	**10TS 2030/L**
22	28	6,3	**10TS 2228/L1**
	30	6,3	**10TS 2230/L1**
	30	7	**10TS 2230/L2**
	30	8	**10TS 2230/L**
	32	8	**10TS 2232/L**
	32	9	**10TS 2232/L1**
24	32	6,5	**10TS 2432/L**
	34	6,5	**10TS 2434/L**

d	D	L	Reference
25	33	6,3	**10TS 2533/L**
	33	7,5	**10TS 2533/L2**
	33	8	**10TS 2533/L3**
	33	9	**10TS 2533/L1**
	35	6,3	**10TS 2535/L3**
	35	8	**10TS 2535/L1**
	35	9	**10TS 2535/L4**
	35	11	**10TS 2535/L5**
	36	6	**10TS 2536/L**
27	37	6,3	**10TS 2737/L**
28	36	6,3	**10TS 2836/L1**
	36	9	**10TS 2836/L**
	38	6,3	**10TS 2838/L**
	38	8	**10TS 2838/L1**
30	38	6,3	**10TS 3038/L1**
	38	8	**10TS 3038/L2**
	38	9	**10TS 3038/L**
	40	7,5	**10TS 3040/L**
	40	8	**10TS 3040/L1**
	40	11	**10TS 3040/L2**
32	40	6,3	**10TS 3240/L1**
	40	7,7	**10TS 3240/L2**
	40	9	**10TS 3240/L**
	42	8	**10TS 3242/L**
	42	11	**10TS 3242/L2**
	42,5	9	**10TS 3242/L3**
	47	11	**10TS 3247/L**
35	43	6,3	**10TS 3543/L2**
	43	7	**10TS 3543/L**
	43	9	**10TS 3543/L1**
	44	8	**10TS 3544/L**
	45	6,3	**10TS 3545/L3**
	45	8	**10TS 3545/L**
	45	11	**10TS 3545/L1**
	45	13,5	**10TS 3545/L2**
	50	11	**10TS 3550/L**
36	44	6,3	**10TS 3644/L1**
	44	9	**10TS 3644/L**
	46	8	**10TS 3646/L**
	46	11	**10TS 3646/L1**

10TS.../L seals with diameters between 20 and 1500 mm can be manufactured within short delivery time.
For prices and availability: **www.all-tec-business.net**

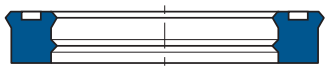

10TS.../L

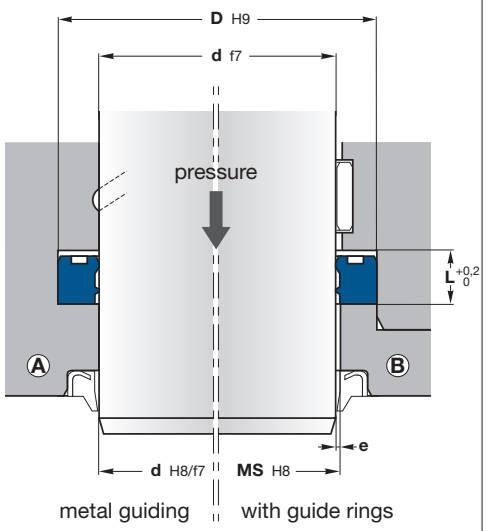

MS = d + 2e

Machining of housings: see pages 48-49

Pressure (MPa)	e (mm)	
	d ≤ 60 mm	**d** > 60 mm
5	≤ 0,4	≤ 0,5
10	≤ 0,3	≤ 0,4
20	≤ 0,2	≤ 0,3
30	≤ 0,15	≤ 0,2
40	≤ 0,1	≤ 0,15

10TS.../L compact rod seals can be used for rod applications thanks to their sealing lip design.

The compact form provides a high sealing effect even with low pressures.

With a wide range of dimensions available, **10TS.../L** compact rod seals, which have an impressive price-performance ratio, are produced using the standard PU materials.

Operating conditions	**see page 8**
Pressure	≤ 40 MPa
Temperature	-30°C to 100°C
Speed	≤ 0,5 m/s
Fluids	**see pages 22-45**

Materials	**see pages 10-19**
Seal	Polyurethane

Assembly	**see pages 54-59**
In closed grooves Ⓐ	
In open grooves Ⓑ	

Advantages

- Excellent abrasion resistance
- Efficient sealing at low and high pressures
- Suitable for telescopic cylinders
- Suitable for small grooves
- Unaffected by sudden loads
- Do not use with double acting wipers without a drain hole between wiper and seal

Please contact us for applications approaching maximum values.

More information

On **www.all-tec-business.net**, click first on the reference and then on the material code to obtain the data sheet of the material.

For special requirements (fluid, temperature, pressure, speed...) or applications approaching maximum values, please contact us. Other materials available: **FPM**, **HNBR**, **TNBR**, **EPDM**...

d	D	L	Reference
37	47	8	**10TS 3747/L**
	47	9	**10TS 3747/L1**
	47	11	**10TS 3747/L2**
38	50	9,5	**10TS 3850/L**
40	48	6,3	**10TS 4048/L1**
	48	7	**10TS 4048/L2**
	48	9	**10TS 4048/L**
	50	6,3	**10TS 4050/L3**
	50	7	**10TS 4050/L**
	50	8	**10TS 4050/L2**
	50	11	**10TS 4050/L1**
	55	11	**10TS 4055/L1**
42	50	7	**10TS 4250/L**
	52	9	**10TS 4252/L**
45	53	6,3	**10TS 4553/L3**
	53	9	**10TS 4553/L**
	55	6,3	**10TS 4555/L2**
	55	8	**10TS 4555/L**
	55	11	**10TS 4555/L1**
	57	10	**10TS 4557/L1**
	57,7	10,5	**10TS 4557/L**
	60	12,5	**10TS 4560/L1**
46	54	9	**10TS 4654/L**
48	60	7	**10TS 4860/L**
50	58	9	**10TS 5058/L**
	60	8	**10TS 5060/L**
	60	10	**10TS 5060/L2**
	60	11	**10TS 5060/L1**
	62	9	**10TS 5062/L1**
	62	11	**10TS 5062/L**
	62,7	10,5	**10TS 5062/L2**
	65	11	**10TS 5065/L**
	65	12,5	**10TS 5065/L1**
	70	14,5	**10TS 5070/L1**
55	63	9	**10TS 5563/L**
	65	8	**10TS 5565/L**
	65	11	**10TS 5565/L1**
	65	13	**10TS 5565/L2**
	70	10,5	**10TS 5570/L1**

d	D	L	Reference
56	66	7,5	**10TS 5666/L1**
	66	11	**10TS 5666/L**
	71	10,5	**10TS 5671/L1**
	71	12,5	**10TS 5671/L**
60	68	9	**10TS 6068/L**
	70	8	**10TS 6070/L**
	70	11	**10TS 6070/L1**
	70	12,5	**10TS 6070/L2**
	70	13	**10TS 6070/L3**
	71	9	**10TS 6071/L**
	72	10	**10TS 6072/L**
	75	11	**10TS 6075/L1**
61	69	8,5	**10TS 6169/L2**
	69	9	**10TS 6169/L**
63	73	11	**10TS 6373/L**
	75	9,5	**10TS 6375/L2**
	75	11	**10TS 6375/L1**
	78	12,5	**10TS 6378/L1**
65	73	9	**10TS 6573/L**
	75	13	**10TS 6575/L**
	77	10	**10TS 6577/L**
68	76	9	**10TS 6876/L**
70	78	9	**10TS 7078/L**
	80	8	**10TS 7080/L**
	80	11	**10TS 7080/L1**
	80	13	**10TS 7080/L2**
	82	10	**10TS 7082/L**
	85	12,5	**10TS 7085/L**
75	83	9	**10TS 7583/L1**
	85	8	**10TS 7585/L**
	85	13	**10TS 7585/L1**
	90	11,5	**10TS 7590/L1**
76	84	8,5	**10TS 7684/L**
	84	8,5	**10TS 7684/L1**
76,2	91,2	13	**10TS 7691/L1**
78	86	9	**10TS 7886/L1**
79	87,7	9	**10TS 7987/L**

10TS.../L seals with diameters between 20 and 1500 mm can be manufactured within short delivery time.
For prices and availability: **www.all-tec-business.net**

10TS.../L

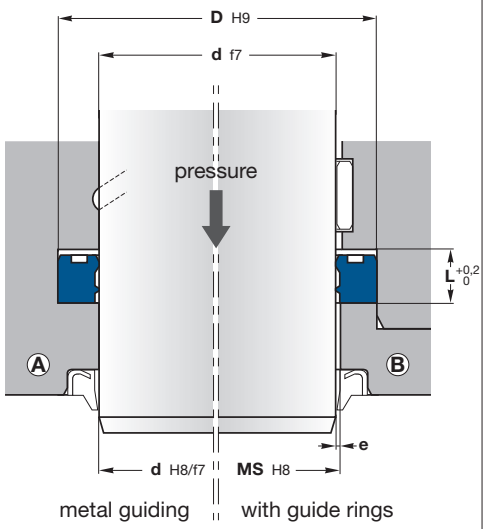

MS = d + 2e

Machining of housings: see pages 48-49

Pressure (MPa)	e (mm)	
	d ≤ 60 mm	**d** > 60 mm
5	≤ 0,4	≤ 0,5
10	≤ 0,3	≤ 0,4
20	≤ 0,2	≤ 0,3
30	≤ 0,15	≤ 0,2
40	≤ 0,1	≤ 0,15

10TS.../L compact rod seals can be used for rod applications thanks to their sealing lip design.

The compact form provides a high sealing effect even with low pressures.

With a wide range of dimensions available, **10TS.../L** compact rod seals, which have an impressive price-performance ratio, are produced using the standard PU materials.

Operating conditions	**see page 8**
Pressure	≤ 40 MPa
Temperature	-30°C to 100°C
Speed	≤ 0,5 m/s
Fluids	**see pages 22-45**

Materials	**see pages 10-19**
Seal	Polyurethane

Assembly	**see pages 54-59**
In closed grooves Ⓐ	
In open grooves Ⓑ	

Advantages

- Excellent abrasion resistance
- Efficient sealing at low and high pressures
- Suitable for telescopic cylinders
- Suitable for small grooves
- Unaffected by sudden loads
- Do not use with double acting wipers without a drain hole between wiper and seal

Please contact us for applications approaching maximum values.

More information

On **www.all-tec-business.net**, click first on the reference and then on the material code to obtain the data sheet of the material.

For special requirements (fluid, temperature, pressure, speed...) or applications approaching maximum values, please contact us. Other materials available: **FPM**, **HNBR**, **TNBR**, **EPDM**...

d	D	L	Reference
80	88	9	**10TS 8088/L2**
	88	12,5	**10TS 8088/L1**
	90	8	**10TS 8090/L**
	90	13	**10TS 8090/L1**
	92	9,6	**10TS 8092/L**
	95	12,5	**10TS 8095/L**
	95	12,5	**10TS 8095/L**
	96	10,5	**10TS 8096/L**
	96	10,5	**10TS 8096/L**
85	93	7,5	**10TS 8593/L2**
	93	9	**10TS 8593/L**
	95	8	**10TS 8595/L**
	95	13	**10TS 8595/L1**
	97	9,5	**10TS 8597/L**
	100	12,5	**10TS 85100/L**
88	96	9	**10TS 8896/L**
	97,3	9	**10TS 8897/L**
88,9	101,6	10,5	**10TS 88101/L**
90	98	9	**10TS 9098/L1**
	100	7,5	**10TS 90100/L**
	102	10	**10TS 90102/L**
	105	12,5	**10TS 90105/L**
91	99	8,5	**10TS 9199/L1**
	99	9	**10TS 9199/L**
95	103	9	**10TS 95103/L**
98	106,7	9	**10TS 98106/L**
100	108	7,5	**10TS 100108/L1**
	108	8	**10TS 100108/L3**
	108	9	**10TS 100108/L2**
	108	12,5	**10TS 100108/L**
	115	13	**10TS 100115/L**
	120	16	**10TS 100120/L1**
105	113	9	**10TS 105113/L**
107	115	8,5	**10TS 107115/L1**
	115	9	**10TS 107115/L**
	116,3	9	**10TS 107116/L**
108	116	9	**10TS 108116/L**

d	D	L	Reference
110	125	10,5	**10TS 110125/L2**
	125	12	**10TS 110125/L**
112	127	13	**10TS 112127/L**
115	123	9	**10TS 115123/L**
116	124,7	9	**10TS 116124/L**
120	128	12,5	**10TS 120128/L1**
	140	13	**10TS 120140/L1**
125	133	7,5	**10TS 125133/L1**
	133	9	**10TS 125133/L**
126	134	9	**10TS 126134/L**
	135,3	9	**10TS 126135/L**
130	145	16	**10TS 130145/L**
	150	13	**10TS 130150/L**
135	143	9	**10TS 135143/L1**
	143,7	9	**10TS 135143/L**
	145	13	**10TS 135145/L**
140	150	12,5	**10TS 140150/L**
	160	12,5	**10TS 140160/L2**
145	153	9	**10TS 145153/L**
	154,3	9	**10TS 145154/L**
150	170	13	**10TS 150170/L**
154	162,7	9	**10TS 154162/L**
160	170	13	**10TS 160170/L**
165	174,3	9	**10TS 165174/L**
170	180	11	**10TS 170180/L**
174	182,7	9	**10TS 174183/L**
175	185	13	**10TS 175185/L**
180	200	13	**10TS 180200/L**
183	190,5	10	**10TS 183190/L**
187	196,3	9	**10TS 187196/L**
190	210	13	**10TS 190210/L1**
210	219,3	9	**10TS 210219/L**
	230	16	**10TS 210230/L1**

10TS.../L seals with diameters between 20 and 1500 mm can be manufactured within short delivery time.
For prices and availability: **www.all-tec-business.net**

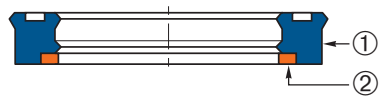

10TS.../LA

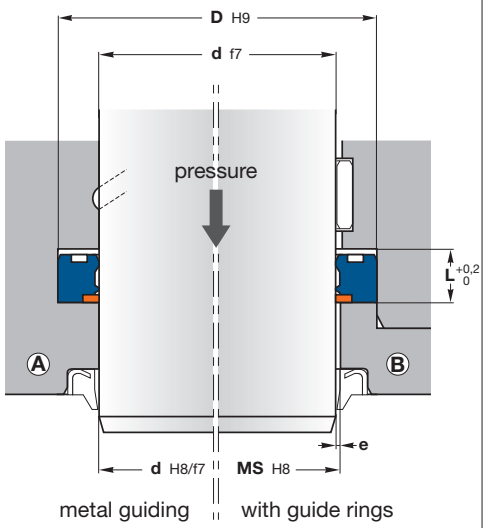

MS = d + 2e

Machining of housings: see pages 48-49

Pressure (MPa)	e (mm)	
	d ≤ 60 mm	**d** > 60 mm
5	≤ 0,6	≤ 0,8
10	≤ 0,6	≤ 0,8
20	≤ 0,4	≤ 0,6
30	≤ 0,3	≤ 0,4
40	≤ 0,2	≤ 0,3
50	≤ 0,1	≤ 0,15

10TS.../LA compact rod seals can be used for rod applications thanks to their sealing lip design.

The compact form and a second lip provide a high sealing effect even at low pressures.

The integrated back-up ring of **10TS.../LA** provides an attractive solution to larger extrusion gaps and high pressure peaks.

Operating conditions	**see page 8**
Pressure	≤ 50 MPa
Temperature	-30°C to 100°C
Speed	≤ 0,5 m/s
Fluids	**see pages 22-45**

Materials	**see pages 10-19**
Seal ①	Polyurethane
Anti-extrusion ring ②	Acetal resin (POM)

Assembly	**see pages 54-59**
In closed grooves Ⓐ	
In open grooves Ⓑ	

Advantages

- Excellent abrasion resistance
- Efficient sealing at low and high pressures
- Suitable for telescopic cylinders
- Suitable for small grooves
- Unaffected by sudden loads
- Do not use with double acting wipers
- The integrated anti-extrusion ring prevents the seal material from extrusion at higher pressure

Please contact us for applications approaching maximum values.

More information

On **www.all-tec-business.net**, click first on the reference and then on the material code to obtain the data sheet of the different materials.

For special requirements (fluid, temperature, pressure, speed...) or applications approaching maximum values, please contact us. Other materials available: **FPM**, **HNBR**, **TNBR**, **EPDM**...

d	D	L	Reference
40	48	9	**10TS 4048/LA**
	50	11	**10TS 4050/LA1**
	52	11	**10TS 4052/LA**
	55	11	**10TS 4055/LA1**
45	53	10,5	**10TS 4553/LA4**
	55	11	**10TS 4555/LA1**
	60	11	**10TS 4560/LA**
50	60	11	**10TS 5060/LA1**
	65	11	**10TS 5065/LA**
55	65	11	**10TS 5565/LA1**
56	71	12,5	**10TS 5671/LA**
60	70	13,5	**10TS 6070/LA4**
	75	13	**10TS 6075/LA**
	80	13	**10TS 6080/LA**
63	75	13	**10TS 6375/LA**
	78	12,5	**10TS 6378/LA1**
	78	13,5	**10TS 6378/LA**
	83	13	**10TS 6383/LA**
	83	14,5	**10TS 6383/LA1**
65	75	13	**10TS 6575/LA**
	80	12,5	**10TS 6580/LA**
70	85	13	**10TS 7085/LA1**
	90	13	**10TS 7090/LA**
	90	14,5	**10TS 7090/LA1**
75	90	13	**10TS 7590/LA**
	95	14,5	**10TS 7595/LA**

d	D	L	Reference
80	88	10	**10TS 8088/LA**
	93	14,5	**10TS 8093/LA**
	95	12,5	**10TS 8095/LA**
	95	12,5	**10TS 8095/LA**
	96	10,5	**10TS 8096/LA**
	96	10,5	**10TS 8096/LA**
	100	12,5	**10TS 80100/LA**
	100	14,5	**10TS 80100/LA1**
90	105	9,5	**10TS 90105/LA2**
	105	13	**10TS 90105/LA1**
	110	13	**10TS 90110/LA**
95	115	14,5	**10TS 95115/LA**
100	110	13,5	**10TS 100110/LA**
	113	13,5	**10TS 100113/LA**
	120	14,5	**10TS 100120/LA**
110	120	14,5	**10TS 110120/LA**
	125	13	**10TS 110125/LA1**
	130	13	**10TS 110130/LA**
120	135	12,5	**10TS 120135/LA1**
	140	12,5	**10TS 120140/LA**
	140	16	**10TS 120140/LA2**
130	145	13	**10TS 130145/LA1**
135	150	13	**10TS 135150/LA1**
140	155	13	**10TS 140155/LA1**

10TS.../LA seals with diameters between 20 and 1500 mm can be manufactured within short delivery time.
For prices and availability: **www.all-tec-business.net**

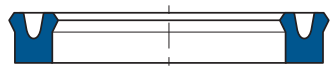

10MU
15MUE

☒ Profile a

10MU

☒ Profile b

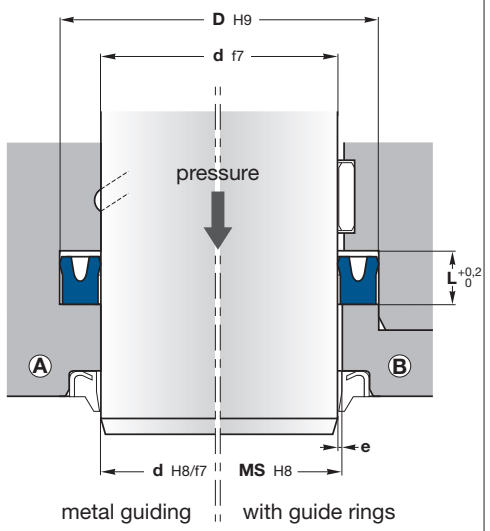

MS = d + 2e

Machining of housings: see pages 48-49

Pressure (MPa)	e (mm)	
	d ≤ 60 mm	**d** > 60 mm
5	≤ 0,4	≤ 0,5
10	≤ 0,3	≤ 0,4
20	≤ 0,2	≤ 0,3
30	≤ 0,15	≤ 0,2
40	≤ 0,1	≤ 0,15

10MU U-ring has a symmetrical configuration of the sealing lips and can therefore also be used as piston seal. The seal design and the polyurethane properties give efficient fluid sealing, reduced friction values and low wear rate. The sealing effect is obtained thanks to the lip pre-compression due to installation into the groove and to the pressure effect on the lips.

Dimensions in **Profile b** can be combined with the corresponding O-ring, resulting in a better compression-set behavior and better performance at low pressure.

Operating conditions see page 8

Pressure	≤ 40 MPa
Temperature	-30°C to 100°C
Speed	≤ 0,5 m/s
Fluids	see pages 22-45

Materials see pages 10-19

Polyurethane

Assembly see pages 54-59

In closed grooves Ⓐ

In open grooves Ⓑ

Advantages

Good price-performance ratio

Symmetric seal for rods and pistons

Excellent abrasion resistance

For new constructions, use preferably the profiles 10EU, 10RS/L, 10TS, 10TS/L... for rod seals

Some 10MU seals have the profile b. In this case, you can put an O-ring (dimensions: see table on next page) into the seal, to obtain the 10EUS profile

Please contact us for applications approaching maximum values.

More information

On **www.all-tec-business.net**, click first on the reference and then on the material code to obtain the data sheet of the material.

For special requirements (fluid, temperature, pressure, speed...) or applications approaching maximum values, please contact us. Other materials available: **FPM**, **HNBR**, **TNBR**, **EPDM**...

d	D	L	☒	O-ring NBR 70 Sh A	Alternative reference	Reference
3	9	5	a			**10MU 0903**
4	9	4,5	a			**10MU 0904**
	10	4,5	a			**10MU 1004**
	10	5	a		**15MUE 1004/1**	**10MU 1004/1**
	12	4,5	a			**10MU 1204**
4,5	11	5,5	a			**10MU 1104**
	12,5	5	a			**10MU 1205/3**
5	12	5	a			**10MU 1205/4**
	12	5,5	a		**15MUE 1205/1**	**10MU 1205/1**
	12	6,5	a		**15MUE 1205/2**	**10MU 1205/2**
	12	7	a			**10MU 1205**
	12,7	9	a			**10MU 1305/1**
	13	4,5	a			**10MU 1305**
	17	10	b	9,25 x 1,78		**10MU 1705**
6	12	4,5	a		**15MUE 1206**	**10MU 1206**
	12	6	a		**15MUE 1206/4**	**10MU 1206/4**
	12	6,5	a		**15MUE 1206/5**	**10MU 1206/5**
	12	9	a			**10MU 1206/2**
	12,7	6,5	a			**10MU 1306**
	15	9	a		**15MUE 1506**	**10MU 1506**
	16	5,5	a			**10MU 1606**
6,3	12,7	4,5	a			**10MU 1206/3**
7	14	4,2	a			**10MU 1407**
	15	4,5	a			**10MU 1507**
	15	8	a			**10MU 1507/1**
8	12	3,5	a		**15MUE 1208**	**10MU 1208**
	14	7	a		**15MUE 1408**	**10MU 1408**
	15	6,3	a		**15MUE 1508**	**10MU 1508**
	15	9	a		**15MUE 1508/2**	**10MU 1508/2**
	16	4,5	a			**10MU 1608**
	16	6,3	a		**15MUE 1608/2**	**10MU 1608/2**
	16	8	a			**10MU 1608/3**
	18	5,5	a			**10MU 1808**
	18	8	a			**10MU 1808/1**
	18	10	b	11,11 x 2,62		**10MU 1808/2**
	20	7	a			**10MU 2008**
	20	9	a			**10MU 2008/1**
	22	9	a		**15MUE 2208**	**10MU 2208**

All the alternative references **15MUE** have the profile a.

10MU seals with diameters between 20 and 1500 mm can be manufactured within short delivery time.
For prices and availability: **www.all-tec-business.net**

ALL-TEC SEALING SYSTEMS

d	D	L	☒	O-ring NBR 70 Sh A	Alternative reference	Reference
9	15	9	a			**10MU 1509**
	19	7	a		**15MUE 1909/1**	**10MU 1909/1**
	22	9,5	a			**10MU 2209**
10	16	4,5	a			**10MU 1610/1**
	16	6,5	a		**15MUE 1610**	**10MU 1610**
	18	4,5	a			**10MU 1810/3**
	18	6	b	12,42 x 1,78		**10MU 1810/1**
	18	7	a		**15MUE 1810**	**10MU 1810**
	18	9	a		**15MUE 1810/4**	**10MU 1810/4**
	20	5,5	a			**10MU 2010**
	20	8	a			**10MU 2010/2**
	20	9	b	12,42 x 1,78	**15MUE 2010/1**	**10MU 2010/1**
	22	7	a			**10MU 2210**
	22	9	b	14,00 x 1,78		**10MU 2210/1**
	25	8	a			**10MU 2510**
11	17	5	a			**10MU 1711**
12	18	5,5	a		**15MUE 1812**	**10MU 1812**
	18	7	a		**15MUE 1812/1**	**10MU 1812/1**
	20	4,5	a		**15MUE 2012/1**	**10MU 2012/1**
	20	8	a			**10MU 2012/2**
	20	9	a		**15MUE 2012**	**10MU 2012**
	22	6	b	14,00 x 1,78		**10MU 2212**
	22	8	b	14,00 x 1,78	**15MUE 2212/4**	**10MU 2212/4**
	22	9	b	14,00 x 1,78	**15MUE 2212/1**	**10MU 2212/1**
	24	6,5	a			**10MU 2412**
	24	9	b	15,60 x 1,78	**15MUE 2412/1**	**10MU 2412/1**
	25	9	a		**15MUE 2512/1**	**10MU 2512/1**
	25	11	a			**10MU 2512**
13	20	7	a			**10MU 2013**
	21	6,5	a			**10MU 2113**
	25	6,5	a			**10MU 2513**
	25	10	a			**10MU 2513/1**
14	20	5,3	a		**15MUE 2014**	**10MU 2014**
	22	4,5	a			**10MU 2214**
	22	7	a		**15MUE 2214/1**	**10MU 2214/1**
	22	9	a		**15MUE 2214/2**	**10MU 2214/2**
	22	12	a			**10MU 2214/3**
	24	5,5	a			**10MU 2414/1**
	24	9	b	17,17 x 1,78	**15MUE 2414**	**10MU 2414**
	27	8	b	17,12 x 2,62		**10MU 2714**

All the alternative references **15MUE** have the profile a.

For special requirements (fluid, temperature, pressure, speed...) or applications approaching maximum values, please contact us. Other materials available: **FPM**, **HNBR**, **TNBR**, **EPDM**...

d	D	L	☒	O-ring NBR 70 Sh A	Alternative reference	Reference
14,3	20,6	5,5	a			**10MU 2114**
14,7	21	7	a			**10MU 2114/1**
15	25	5,5	a			**10MU 2515/1**
	25	9	b	18,77 x 1,78	**15MUE 2515/2**	**10MU 2515/2**
	25	11	b	18,77 x 1,78		**10MU 2515**
	27	7	a			**10MU 2715**
	27	10	a			**10MU 2715/1**
	30	8	a			**10MU 3015**
	35	11	a			**10MU 3515**
15,9	25,4	7	a			**10MU 2516**
16	22	4,5	a			**10MU 2216**
	22	5,5	a			**10MU 2216/2**
	24	4,5	a			**10MU 2416/1**
	24	6	a		**15MUE 2416/2**	**10MU 2416/2**
	24	7	a			**10MU 2416/4**
	24	9	a			**10MU 2416/3**
	24	10	a		**15MUE 2416**	**10MU 2416**
	25	9	a			**10MU 2516/1**
	26	6	b	18,77 x 1,78	**15MUE 2616**	**10MU 2616**
	26	9	b	18,77 x 1,78	**15MUE 2616/1**	**10MU 2616/1**
	26	11	a			**10MU 2616/2**
	28	7	b	20,35 x 1,78	**15MUE 2816**	**10MU 2816**
	32	9	a		**15MUE 3216**	**10MU 3216**
17	25	4,5	a			**10MU 2517**
	25	6,5	a			**10MU 2517/1**
	25	11	a			**10MU 2517/2**
	27	7,5	a			**10MU 2717**
18	25	5,5	a		**15MUE 2518**	**10MU 2518**
	25	7	a		**15MUE 2518/1**	**10MU 2518/1**
	26	4,5	a		**15MUE 2618/1**	**10MU 2618/1**
	26	7,5	a		**15MUE 2618**	**10MU 2618**
	26	9	a		**15MUE 2618/4**	**10MU 2618/4**
	28	5,5	a			**10MU 2818**
	28	6,3	a			**10MU 2818/2**
	28	9	b	20,35 x 1,78	**15MUE 2818/1**	**10MU 2818/1**
	30	6,5	a			**10MU 3018**
	30	9	a		**15MUE 3018/1**	**10MU 3018/1**
	38	11	a			**10MU 3818**

All the alternative references **15MUE** have the profile a.

10MU seals with diameters between 20 and 1500 mm can be manufactured within short delivery time.
For prices and availability: **www.all-tec-business.net**

ALL-TEC SEALING SYSTEMS

d	D	L	☒	O-ring NBR 70 Sh A	Alternative reference	Reference
19	25	3,5	a			**10MU 2519/1**
	25	7	a		**15MUE 2519**	**10MU 2519**
20	26	3,8	a			**10MU 2620/1**
	26	6	a			**10MU 2620**
	28	5	a		**15MUE 2820**	**10MU 2820**
	28	5,5	a			**10MU 2820/1**
	28	7	a			**10MU 2820/2**
	28	8	a			**10MU 2820/4**
	28	9	a		**15MUE 2820/3**	**10MU 2820/3**
	29	5,5	b	21,95 x 1,78		**10MU 2920**
	30	5,5	a			**10MU 3020/1**
	30	8	a			**10MU 3020/3**
	30	9	a		**15MUE 3020/2**	**10MU 3020/2**
	30	11	b	21,95 x 1,78	**15MUE 3020**	**10MU 3020**
	32	6	a			**10MU 3220**
	32	6,5	a			**10MU 3220/4**
	32	8,5	b	23,52 x 1,78	**15MUE 3220/2**	**10MU 3220/2**
	32	10	a			**10MU 3220/1**
	35	10	a			**10MU 3520/2**
	35	13	a		**15MUE 3520**	**10MU 3520**
	39	11	a			**10MU 3920**
	40	11	b	26,57 x 3,53	**15MUE 4020/1**	**10MU 4020/1**
	40	12	a			**10MU 4020**
	40	13	a			**10MU 4020/2**
22	28	5	a			**10MU 2822/1**
	28	9	a		**15MUE 2822**	**10MU 2822**
	30	4,5	a			**10MU 3022/1**
	30	7	a		**15MUE 3022/2**	**10MU 3022/2**
	30	7,5	a			**10MU 3022**
	30	9	a			**10MU 3022/4**
	30	11	a		**15MUE 3022/3**	**10MU 3022/3**
	32	5,5	a			**10MU 3222/1**
	32	9	b	25,12 x 1,78	**15MUE 3222**	**10MU 3222**
	32	11	b	25,12 x 1,78	**15MUE 3222/2**	**10MU 3222/2**
	34	6,5	a			**10MU 3422**
	35	6	a			**10MU 3522/1**
	35	11	b	25,07 x 2,62	**15MUE 3522**	**10MU 3522**
	36	11	a			**10MU 3622**
	40	11	b	26,57 x 3,53		**10MU 4022**

All the alternative references **15MUE** have the profile a.

For special requirements (fluid, temperature, pressure, speed...) or applications approaching maximum values, please contact us. Other materials available: **FPM**, **HNBR**, **TNBR**, **EPDM**...

d	D	L	☒	O-ring NBR 70 Sh A	Alternative reference	Reference
23	33	8	a			**10MU 3323/1**
	35	6,5	a			**10MU 3523**
24	32	4,5	a			**10MU 3224/2**
	32	6,5	a			**10MU 3224/3**
	32	7,5	a			**10MU 3224/1**
	32	8	a			**10MU 3224/4**
	34	5,5	a			**10MU 3424**
	36	6,5	a			**10MU 3624**
	36	10	a			**10MU 3624/1**
25	33	4,5	a			**10MU 3325/1**
	33	5,5	a			**10MU 3325/2**
	33	7,5	a			**10MU 3325**
	35	5,5	b	28,30 x 1,78	**15MUE 3525/1**	**10MU 3525/1**
	35	8	a			**10MU 3525/3**
	35	9	b	28,30 x 1,78	**15MUE 3525/2**	**10MU 3525/2**
	35	11	b	28,30 x 1,78	**15MUE 3525**	**10MU 3525**
	37	6,5	a			**10MU 3725**
	37	10	a			**10MU 3725/1**
	38	9	b	28,24 x 2,62		**10MU 3825**
	38	11	b	28,24 x 2,62	**15MUE 3825/2**	**10MU 3825/2**
	38,1	7	a			**10MU 3825/1**
	40	8	a			**10MU 4025**
	40	11	b	29,82 x 2,62	**15MUE 4025/1**	**10MU 4025/1**
	45	11	a			**10MU 4525**
26	34	4,5	a			**10MU 3426**
	36	8	a			**10MU 3626/1**
	38	6,5	a			**10MU 3826**
27	35	6,5	a			**10MU 3527**
28	35	5,5	a			**10MU 3528**
	36	7,5	a		**15MUE 3628**	**10MU 3628**
	38	8	b	31,47 x 1,78		**10MU 3828/3**
	38	9	b	31,47 x 1,78	**15MUE 3828/1**	**10MU 3828/1**
	38	11	b	31,47 x 1,78		**10MU 3828/2**
	40	6,5	a			**10MU 4028**
	40	11	b	29,87 x 1,78	**15MUE 4028/1**	**10MU 4028/1**
28,6	41,3	9	a			**10MU 4129**
29	37	4,5	a			**10MU 3729**

All the alternative references **15MUE** have the profile a.

10MU seals with diameters between 20 and 1500 mm can be manufactured within short delivery time.
For prices and availability: **www.all-tec-business.net**

ALL-TEC SEALING SYSTEMS

d	D	L	☒	O-ring NBR 70 Sh A	Alternative reference	Reference
30	36	4,5	a			**10MU 3630**
	37	7	a			**10MU 3730**
	38	4,5	a			**10MU 3830/1**
	38	6,5	a		**15MUE 3830/2**	**10MU 3830/2**
	38	8	a			**10MU 3830**
	40	5,5	b	31,47 x 1,78	**15MUE 4030/1**	**10MU 4030/1**
30	40	7	b	31,47 x 1,78		**10MU 4030/2**
	40	8	a			**10MU 4030/3**
	40	9	a			**10MU 4030/4**
	40	11	a		**15MUE 4030**	**10MU 4030**
	42	6,5	a			**10MU 4230/1**
	42	10	b	34,65 x 1,78	**15MUE 4230**	**10MU 4230**
	42	11	b	34,65 x 1,78	**15MUE 4230/2**	**10MU 4230/2**
	45	10	a			**10MU 4530**
	45	11	b	34,59 x 2,62	**15MUE 4530/1**	**10MU 4530/1**
	50	11	b	36,09 x 3,53	**15MUE 5030**	**10MU 5030**
	50	13	b	36,09 x 3,53	**15MUE 5030/1**	**10MU 5030/1**
32	40	4,5	a			**10MU 4032/1**
	40	6	b	34,65 x 1,78		**10MU 4032**
	40	9	b	34,65 x 1,78	**15MUE 4032/3**	**10MU 4032/3**
	42	5,5	a			**10MU 4232/1**
	42	8	a			**10MU 4232/2**
	42	11	b	34,65 x 1,78	**15MUE 4232**	**10MU 4232**
	44	6,5	a			**10MU 4432**
	44	10	a			**10MU 4432/1**
	45	11	b	37,77 x 2,62	**15MUE 4532**	**10MU 4532**
	48	11	a			**10MU 4832**
	50	13	a			**10MU 5032/1**
	52	11	a			**10MU 5232**
33	43	5,5	a			**10MU 4333**
34	42	6,5	a			**10MU 4234**
	44	8	a			**10MU 4434/1**
	45	8	b	37,82 x 1,78		**10MU 4534/1**
	45	10	b	37,82 x 1,78		**10MU 4534**
	74	11	a			**10MU 7434**
35	43	9	a			**10MU 4335/2**
	45	5,5	a			**10MU 4535**
	45	7	b	37,82 x 1,78		**10MU 4535/4**
	45	8	b	37,82 x 1,78		**10MU 4535/5**
	45	9	b	37,82 x 1,78	**15MUE 4535/2**	**10MU 4535/2**
	45	11	b	37,82 x 1,78	**15MUE 4535/3**	**10MU 4535/3**

All the alternative references **15MUE** have the profile a.

For special requirements (fluid, temperature, pressure, speed...) or applications approaching maximum values, please contact us. Other materials available: **FPM**, **HNBR**, **TNBR**, **EPDM**...

d	D	L	☒	O-ring NBR 70 Sh A	Alternative reference	Reference
36	47	10	a			**10MU 4735/1**
	48	11	b	37,77 x 2,62	**15MUE 4835**	**10MU 4835**
	50	8	a			**10MU 5035**
	50	11	b	39,34 x 2,62	**15MUE 5035/1**	**10MU 5035/1**
	55	11	b	41,28 x 3,53		**10MU 5535**
	55	13	a		**15MUE 5535/1**	**10MU 5535/1**
	60	13	a			**10MU 6035**
35,5	45	7,5	a			**10MU 4535/6**
36	46	5,5	a			**10MU 4636/1**
	46	8	b	39,34 x 2,62		**10MU 4636**
	48	6,5	a			**10MU 4836/1**
	48	9	a			**10MU 4836**
	70	11	a			**10MU 7036**
37	45	6,5	a			**10MU 4537**
38	45	5,5	a			**10MU 4538**
	46	6,5	a			**10MU 4638/1**
	46	7,5	b	41,00 x 1,78		**10MU 4638**
	48	5,5	a			**10MU 4838**
	50	6,5	a			**10MU 5038**
	50	10	a		**15MUE 5038/1**	**10MU 5038/1**
	50	12	a			**10MU 5038/2**
	53	9	a			**10MU 5338**
	55	11	b	44,12 x 2,62	**15MUE 5538**	**10MU 5538**
	58	11	a			**10MU 5838**
40	48	6,5	a			**10MU 4840**
	48	7	a			**10MU 4840/3**
	48	9	a		**15MUE 4840/2**	**10MU 4840/2**
	48	12	a		**15MUE 4840/1**	**10MU 4840/1**
	50	5,5	b	44,17 x 1,78		**10MU 5040/2**
	50	7	a			**10MU 5040/4**
	50	7,5	b	44,17 x 1,78	**15MUE 5040**	**10MU 5040**
	50	9	b	44,17 x 1,78		**10MU 5040/3**
	50	11	b	44,17 x 1,78	**15MUE 5040/1**	**10MU 5040/1**
	52	6,5	a			**10MU 5240/1**
	52	9	a			**10MU 5240**
	52	11	a			**10MU 5240/2**
	55	8	a			**10MU 5540/3**
	55	11	a		**15MUE 5540**	**10MU 5540**
	56	11	a		**15MUE 5640**	**10MU 5640**

All the alternative references **15MUE** have the profile a.

10MU seals with diameters between 20 and 1500 mm can be manufactured within short delivery time.
For prices and availability: **www.all-tec-business.net**

ALL-TEC SEALING SYSTEMS

d	D	L	☒	O-ring NBR 70 Sh A	Alternative reference	Reference
40	60	11	b	46,04 x 3,53	15MUE 6040/1	10MU 6040/1
	60	13	a			10MU 6040/4
	60	14	b	46,04 x 3,53	15MUE 6040/2	10MU 6040/2
	60	19	a		15MUE 6040/3	10MU 6040/3
	65	13	a			10MU 6540
	70	16	a			10MU 7040
	75	11	a			10MU 7540
41,3	50,8	6	a			10MU 5141/1
42	50	6,5	b	44,17 x 1,78		10MU 5042/1
	50	9	b	44,17 x 1,78		10MU 5042
	52	5,5	a			10MU 5242
	52	10	a			10MU 5242/1
	54	6,5	a			10MU 5442
	62	13	b	47,62 x 3,53		10MU 6242
43	53	8	a			10MU 5343/1
44	50	9,5	a			10MU 5044
	54	5,5	a			10MU 5444
	54	8	a			10MU 5444/1
	56	6,5	a			10MU 5644
45	53	7,5	b	47,35 x 1,78		10MU 5345
	53	11	a			10MU 5345/1
	53	13	a			10MU 5345/2
	55	7	a		15MUE 5545/5	10MU 5545/5
	55	7,5	b	47,35 x 1,78	15MUE 5545	10MU 5545
	55	9	a			10MU 5545/3
	55	11	b	47,35 x 1,78	15MUE 5545/1	10MU 5545/1
	55	13	a			10MU 5545/4
	56	8	b	47,35 x 1,78		10MU 5645
	58	11	a			10MU 5845/2
	60	8	a			10MU 6045/1
	60	11	b	48,90 x 2,62	15MUE 6045	10MU 6045
	60	13	a			10MU 6045/2
	63	11	b	50,39 x 3,53	15MUE 6345	10MU 6345
	65	11	b	50,80 x 3,53	15MUE 6545	10MU 6545
	65	13	b	50,80 x 3,53	15MUE 6545/1	10MU 6545/1
	70	13	a			10MU 7045
46	56	5,5	a			10MU 5646
	56	8	a			10MU 5646/1
	58	6,5	a			10MU 5846

All the alternative references **15MUE** have the profile a.

For special requirements (fluid, temperature, pressure, speed...) or applications approaching maximum values, please contact us. Other materials available: **FPM**, **HNBR**, **TNBR**, **EPDM**...

d	D	L	☒	O-ring NBR 70 Sh A	Alternative reference	Reference
46,3	64	9,5	a			10MU 6446
48	58	11	b	50,52 x 1,78		10MU 5848
	60	6,5	a			10MU 6048
	60	10	a			10MU 6048/1
	63	11	a			10MU 6348
50	58	5,5	a			10MU 5850
	60	5,5	a			10MU 6050/2
	60	7	b	53,70 x 1,78		10MU 6050/3
	60	8	b	53,70 x 1,78		10MU 6050/6
	60	9	a			10MU 6050/5
	60	11	b	53,70 x 1,78	15MUE 6050	10MU 6050
	60	12	a		15MUE 6050/1	10MU 6050/1
	60	13	b	53,70 x 1,78		10MU 6050/4
	62	10	b	53,70 x 1,78	15MUE 6250	10MU 6250
	63	7	b	53,70 x 1,78	15MUE 6350	10MU 6350
	65	8	a			10MU 6550/2
	65	11	b	55,25 x 2,62	15MUE 6550/1	10MU 6550/1
	65	12	a			10MU 6550
	65	12,5	a			10MU 6550
	68	11	a			10MU 6850
	70	11	b	56,74 x 3,53	15MUE 7050/1	10MU 7050/1
	70	13	b	56,74 x 3,53	15MUE 7050	10MU 7050
	70	16	a			10MU 7050/2
	70	19	a		15MUE 7050/3	10MU 7050/3
	72	13	a			10MU 7250
	75	13	a			10MU 7550
	80	11	a			10MU 8050
51	63	6,5	a			10MU 6351
	63	10	a			10MU 6351/1
52	60	6,5	a			10MU 6052
	62	13	a			10MU 6252
	64	6,5	a			10MU 6452
	72	13	a			10MU 7252
53	63	5,5	a			10MU 6353/1
	63	7,5	b	56,87 x 1,78	15MUE 6353	10MU 6353
	63	8	a			10MU 6353/2
	63	13	a			10MU 6353/3
	65	6,5	a			10MU 6553

All the alternative references **15MUE** have the profile a.

10MU seals with diameters between 20 and 1500 mm can be manufactured within short delivery time.
For prices and availability: **www.all-tec-business.net**

ALL-TEC SEALING SYSTEMS

d	D	L	☒	O-ring NBR 70 Sh A	Alternative reference	Reference
54	70	13	a			**10MU 7054**
55	65	5,5	a			**10MU 6555/2**
	65	7	b	56,87 x 1,78		**10MU 6555/4**
	65	11	b	56,87 x 1,78	**15MUE 6555/1**	**10MU 6555/1**
	65	13	a		**15MUE 6555**	**10MU 6555**
	70	8	a			**10MU 7055/1**
	70	11	a			**10MU 7055**
	70	12	a			**10MU 7055/3**
	70	13	b	59,99 x 2,62	**15MUE 7055/2**	**10MU 7055/2**
	75	11	a			**10MU 7555**
	75	13	b	61,90 x 3,53	**15MUE 7555/1**	**10MU 7555/1**
	80	13	a			**10MU 8055**
	80	15	a			**10MU 8055/2**
	85	16	a			**10MU 8555**
56	66	5,5	b	60,05 x 1,78		**10MU 6656**
	66	8	a			**10MU 6656/1**
	66	11	a			**10MU 6656/2**
	66	12	a			**10MU 6656/3**
	76	13	a			**10MU 7656**
57,1	73	12	a			**10MU 7357**
60	70	5,5	b	60,05 x 1,78		**10MU 7060/2**
	70	7	b	60,05 x 1,78		**10MU 7060/5**
	70	9	b	60,05 x 1,78	**15MUE 7060**	**10MU 7060**
	70	11	b	60,05 x 1,78	**15MUE 7060/3**	**10MU 7060/3**
	70	13	b	60,05 x 1,78	**15MUE 7060/1**	**10MU 7060/1**
	75	8	a			**10MU 7560/1**
	75	11	b	64,77 x 2,62	**15MUE 7560/2**	**10MU 7560/2**
	75	13	b	64,77 x 2,62	**15MUE 7560**	**10MU 7560**
	76	13	a			**10MU 7660**
	80	11	b	66,27 x 3,53	**15MUE 8060**	**10MU 8060**
	80	13	b	66,27 x 3,53	**15MUE 8060/1**	**10MU 8060/1**
	80	16	a			**10MU 8060/2**
	80	19	a		**15MUE 8060/3**	**10MU 8060/3**
	85	11	a			**10MU 8560/2**
	90	16	a			**10MU 9060**
62	72	12	a			**10MU 7262**

All the alternative references **15MUE** have the profile a.

For special requirements (fluid, temperature, pressure, speed...) or applications approaching maximum values, please contact us. Other materials available: **FPM**, **HNBR**, **TNBR**, **EPDM**...

d	D	L	☒	O-ring NBR 70 Sh A	Alternative reference	Reference
63	73	5,5	a			**10MU 7363**
	73	7	b	66,40 x 1,78		**10MU 7363/3**
	73	8	a			**10MU 7363/1**
	75	10	a			**10MU 7563/2**
	75	11	b	66,40 x 1,78	**15MUE 7563**	**10MU 7563**
	78	11	a			**10MU 7863**
	83	13	a			**10MU 8363/1**
	83	16	a			**10MU 8363**
64	80	13	a			**10MU 8064**
65	75	5,5	a			**10MU 7565/1**
	75	7	b	66,40 x 1,78		**10MU 7565/2**
	75	8	a			**10MU 7565/5**
	75	10	a			**10MU 7565/4**
	75	11	a			**10MU 7565/3**
	75	13	b	66,40 x 1,78	**15MUE 7565**	**10MU 7565**
	80	8	a			**10MU 8065/1**
	80	11	b	69,52 x 2,62		**10MU 8065/3**
	80	12	a		**15MUE 8065/2**	**10MU 8065/2**
	80	13	b	69,52 x 2,62	**15MUE 8065**	**10MU 8065**
	85	11	a			**10MU 8565/1**
	85	13	b	71,44 x 3,53	**15MUE 8565**	**10MU 8565**
	85	16	a			**10MU 8565/2**
66	76	9	a			**10MU 7666**
	80	11	a			**10MU 8066**
	80	14	a			**10MU 8066/1**
67	77	11	b	72,75 x 1,78		**10MU 7767/1**
	77	13	a			**10MU 7767**
70	80	5,5	b	72,75 x 1,78		**10MU 8070/2**
	80	7	b	72,75 x 1,78		**10MU 8070/5**
	80	8	a			**10MU 8070/4**
	80	9	b	72,75 x 1,78	**15MUE 8070**	**10MU 8070**
	80	11	b	72,75 x 1,78	**15MUE 8070/3**	**10MU 8070/3**
	80	13	b	72,75 x 1,78	**15MUE 8070/1**	**10MU 8070/1**
	82	10	a			**10MU 8270/1**
	85	11	a			**10MU 8570**
	85	12	b	75,87 x 2,62		**10MU 8570/1**
	85	13	a		**15MUE 8570/2**	**10MU 8570/2**
	90	11	a			**10MU 9070/1**
	90	13	b	75,79 x 3,53	**15MUE 9070**	**10MU 9070**

All the alternative references **15MUE** have the profile a.

10MU seals with diameters between 20 and 1500 mm can be manufactured within short delivery time.
For prices and availability: **www.all-tec-business.net**

d	D	L	☒	O-ring NBR 70 Sh A	Alternative reference	Reference
70	90	16	a			**10MU 9070/2**
	90	19	a		**15MUE 9070/3**	**10MU 9070/3**
	95	11	a			**10MU 9570/2**
	95	13	a			**10MU 9570**
	100	16	a			**10MU 10070**
73	85	10	a			**10MU 8573**
75	85	5,5	a			**10MU 8575/1**
	85	7	b	75,92 x 1,78		**10MU 8575/3**
	85	8	a			**10MU 8575/4**
	85	11	a			**10MU 8575/2**
	85	13	b	75,92 x 1,78	**15MUE 8575**	**10MU 8575**
	90	8,5	b	75,87 x 2,62		**10MU 9075/1**
	90	11	b	75,87 x 2,62	**15MUE 9075**	**10MU 9075**
	90	13	b	75,87 x 2,62	**15MUE 9075/2**	**10MU 9075/2**
	91	13	a			**10MU 9175**
	95	11	a			**10MU 9575/3**
	95	13	b	82,14 x 3,53	**15MUE 9575/1**	**10MU 9575/1**
	95	14,5	a			**10MU 9575**
	100	13	a			**10MU 10075**
	100	20	a			**10MU 10075/1**
76	92	13	a			**10MU 9276**
80	90	5,5	b	82,27 x 1,78		**10MU 9080**
	90	7	b	82,27 x 1,78		**10MU 9080/1**
	90	8	a			**10MU 9080/4**
	90	9	b	82,27 x 1,78		**10MU 9080/5**
	90	11	b	82,27 x 1,78	**15MUE 9080/2**	**10MU 9080/2**
	90	13	b	82,27 x 1,78	**15MUE 9080/3**	**10MU 9080/3**
	95	8	a			**10MU 9580**
	95	11	a			**10MU 9580/2**
	95	13	b	82,22 x 2,62	**15MUE 9580/1**	**10MU 9580/1**
	100	11	a		**15MUE 10080/1**	**10MU 10080/1**
	100	13	b	85,32 x 3,53	**15MUE 10080**	**10MU 10080**
	100	16	a			**10MU 10080/2**
	105	13	a			**10MU 10580**
	105	23	a			**10MU 10580/3**
	110	16	a			**10MU 11080**
83	95	10	a			**10MU 9583**

All the alternative references **15MUE** have the profile a.

For special requirements (fluid, temperature, pressure, speed...) or applications approaching maximum values, please contact us. Other materials available: **FPM**, **HNBR**, **TNBR**, **EPDM**...

d	D	L	☒	O-ring NBR 70 Sh A	Alternative reference	Reference
85	95	5,5	a			**10MU 9585/1**
	95	9,5	b	88,62 x 1,78		**10MU 9585**
	95	13	b	88,62 x 1,78	**15MUE 9585/3**	**10MU 9585/3**
	100	8	a			**10MU 10085/1**
	100	10	b	88,57 x 2,62		**10MU 10085/3**
	100	12	a			**10MU 10085/2**
	100	13	b	88,57 x 2,62	**15MUE 10085**	**10MU 10085**
	101	13	a			**10MU 10185**
	105	13	b	91,67 x 3,53		**10MU 10585/1**
	105	16	a			**10MU 10585**
	105	19	a			**10MU 10585/2**
	110	13	a			**10MU 11085**
86	101	13	a			**10MU 10186**
88	100	10	a			**10MU 10088**
88,9	114,3	15	a			**10MU 114089**
90	100	5,5	a			**10MU 10090/2**
	100	8	a			**10MU 10090/4**
	100	9	b	94,97 x 1,78		**10MU 10090**
	100	11	a			**10MU 10090/1**
	100	13	b	94,97 x 1,78	**15MUE 10090/3**	**10MU 10090/3**
	105	8	a			**10MU 10590/1**
	105	13	b	94,92 x 2,62		**10MU 10590**
	110	11	a			**10MU 11090/1**
	110	13	b	94,84 x 3,53		**10MU 11090**
	110	16	a			**10MU 11090/2**
	110	19	a			**10MU 11090/3**
	115	13	a			**10MU 115090**
	115	16	a			**10MU 115090/2**
	120	16	a			**10MU 120090**
95	105	5,5	a			**10MU 10595/1**
	107	10	a			**10MU 10795**
	110	13	b	101,27 x 2,62		**10MU 11095/1**
	110	16	a			**10MU 11095/2**
	112	12	a			**10MU 112095/1**
	115	13	b	101,19 x 3,53		**10MU 115095**
	115	16	a			**10MU 115095/2**
	115	19	a			**10MU 115095/3**
	120	20	a			**10MU 120095/1**

All the alternative references **15MUE** have the profile a.

10MU seals with diameters between 20 and 1500 mm can be manufactured within short delivery time.
For prices and availability: **www.all-tec-business.net**

ALL-TEC SEALING SYSTEMS

d	D	L	☒	O-ring NBR 70 Sh A	Alternative reference	Reference
99	115	13	a			**10MU 115099**
100	110	5,5	a			**10MU 110100**
	112	10	a			**10MU 112100**
	115	13	b	101,27 x 2,62		**10MU 115100**
	115	16	a			**10MU 115100/1**
	120	11	a			**10MU 120100/1**
	120	13	b	107,54 x 3,53		**10MU 120100**
100	120	16	a			**10MU 120100/2**
	120	19	a			**10MU 120100/3**
	125	13	b	107,54 x 3,53		**10MU 125100**
	125	16	b	107,54 x 3,53		**10MU 125100/1**
	125	20	a			**10MU 125100/2**
	130	16	a			**10MU 130100/1**
102	112	12	a			**10MU 112102**
103	115	10	a			**10MU 115103**
105	117	10	a			**10MU 117105**
	120	9	a			**10MU 120105/3**
	120	12	a			**10MU 120105/1**
	120	16	b	107,62 x 2,62		**10MU 120105/2**
	125	11	a			**10MU 125105/1**
	125	13	b	110,72 x 3,53		**10MU 125105**
	125	16	b	110,72 x 3,53		**10MU 125105/2**
	130	13	a			**10MU 130105**
110	125	10	b	113,97 x 2,62		**10MU 125110/3**
	125	13	b	113,97 x 2,62		**10MU 125110/1**
	125	16	b	113,97 x 2,62		**10MU 125110/2**
	130	11	a			**10MU 130110/2**
	130	13	a			**10MU 130110/1**
	130	16	b	117,07 x 3,53		**10MU 130110**
	130	19	a			**10MU 130110/3**
	135	16	a			**10MU 135110/1**
	140	16	a			**10MU 140110**
111	121	6,5	a			**10MU 121111**
115	130	8	a			**10MU 130115**
	130	11	a			**10MU 130115/3**
	130	12	a			**10MU 130115/1**
	130	16	a			**10MU 130115/2**
	135	16	b	120,24 x 3,53		**10MU 135115**
	140	16	a			**10MU 140115/1**

All the alternative references **15MUE** have the profile a.

d	D	L	☒	O-ring NBR 70 Sh A	Alternative reference	Reference
118	130	11	a			**10MU 130118**
120	130	15	a			**10MU 130120**
	135	16	a			**10MU 135120**
	140	11	a			**10MU 140120/1**
	140	13	a			**10MU 140120**
	140	16	b	126,59 x 3,53		**10MU 140120/2**
123	135	10	a			**10MU 135123**
125	137	10	a			**10MU 137125**
	140	12	b	126,67 x 2,62		**10MU 140125**
	140	16	b	126,67 x 2,62		**10MU 140125/2**
	145	13	a			**10MU 145125/2**
	145	16	b	129,77 x 3,53		**10MU 145125**
	145	19	a			**10MU 145125/1**
	155	16	a			**10MU 155125**
130	145	13				**10MU 145130**
	145	16	a			**10MU 145130/2**
	150	16	b	136,12 x 3,53		**10MU 150130/1**
	155	20	a			**10MU 155130/1**
	160	19	a			**10MU 160130**
135	150	16	a			**10MU 150135/1**
	155	16	a			**10MU 155135**
	160	13	a			**10MU 160135**
	160	16	a			**10MU 160135/1**
138	150	10	a			**10MU 150138**
140	160	11	a			**10MU 160140**
	160	13	a			**10MU 160140/2**
	160	16	b	145,64 x 3,53		**10MU 160140/1**
	165	16	a			**10MU 165140/1**
145	165	16	b	151,99 x 3,53		**10MU 165145**
	170	20	a			**10MU 170145/1**
150	170	10	a			**10MU 170150**
	170	16	b	151,99 x 3,53		**10MU 170150/2**
155	170	12	a			**10MU 170155**
158	170	10	a			**10MU 170158**
160	175	12	a			**10MU 175160**
	180	16	b	164,69 x 3,53		**10MU 180160**

All the alternative references **15MUE** have the profile a.

For special requirements (fluid, temperature, pressure, speed...) or applications approaching maximum values, please contact us. Other materials available: **FPM**, **HNBR**, **TNBR**, **EPDM**...

10MU seals with diameters between 20 and 1500 mm can be manufactured within short delivery time. For prices and availability: **www.all-tec-business.net**

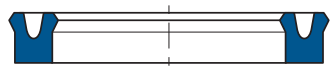

10MU
15MUE

Profile a

10MU

Profile b

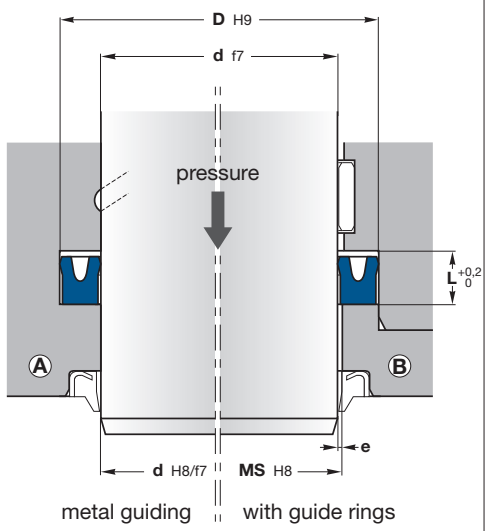

MS = d + 2e

Machining of housings: see pages 48-49

Pressure (MPa)	e (mm)	
	d ≤ 60 mm	**d** > 60 mm
5	≤ 0,4	≤ 0,5
10	≤ 0,3	≤ 0,4
20	≤ 0,2	≤ 0,3
30	≤ 0,15	≤ 0,2
40	≤ 0,1	≤ 0,15

10MU U-ring has a symmetrical configuration of the sealing lips and can therefore also be used as piston seal. The seal design and the polyurethane properties give efficient fluid sealing, reduced friction values and low wear rate. The sealing effect is obtained thanks to the lip pre-compression due to installation into the groove and to the pressure effect on the lips.

Dimensions in **Profile b** can be combined with the corresponding O-ring, resulting in a better compression-set behavior and better performance at low pressure.

Operating conditions	**see page 8**
Pressure	≤ 40 MPa
Temperature	-30°C to 100°C
Speed	≤ 0,5 m/s
Fluids	**see pages 22-45**

Materials	**see pages 10-19**
	Polyurethane

Assembly	**see pages 54-59**
In closed grooves Ⓐ	
In open grooves Ⓑ	

Advantages

- Good price-performance ratio
- Symmetric seal for rods and pistons
- Excellent abrasion resistance
- For new constructions, use preferably the profiles 10EU, 10RS/L, 10TS, 10TS/L... for rod seals
- Some 10MU seals have the profile b. In this case, you can put an O-ring (dimensions: see table on next page) into the seal, to obtain the 10EUS profile

Please contact us for applications approaching maximum values.

More information

On **www.all-tec-business.net**, click first on the reference and then on the material code to obtain the data sheet of the material.

For special requirements (fluid, temperature, pressure, speed...) or applications approaching maximum values, please contact us. Other materials available: **FPM**, **HNBR**, **TNBR**, **EPDM**...

d	D	L	⌧	O-ring NBR 70 Sh A	Alternative reference	Reference
165	185	16	a			**10MU 185165**
170	185	12	a			**10MU 185170**
	190	13	b	177,39 x 3,53		**10MU 190170/1**
	190	16	b	177,39 x 3,53		**10MU 190170**
	200	16	a			**10MU 200170**
	200	19	a			**10MU 200170/1**
175	200	16	b	183,74 x 3,53		**10MU 200175/1**
180	195	12	a			**10MU 195180**
	200	13	a			**10MU 200180/2**
	200	16	b	183,74 x 3,53		**10MU 200180**
188	200	10	a			**10MU 200188**
190	220	23	a			**10MU 220190**
200	220	13	b			**10MU 220200**
	220	16	a		**15MUE 220200/1**	**10MU 220200/1**
	225	19	b	209,14 x 3,53		**10MU 225200/2**
210	240	18	a			**10MU 240210**
220	250	16	a			**10MU 250220/2**
	250	19	b	215,27 x 5,34		**10MU 250220**
	250	22	a			**10MU 250220/1**
230	250	16	a			**10MU 250230**
250	270	16	a			**10MU 270250**
	280	19	a			**10MU 280250**
270	290	18	a			**10MU 290270/1**
	300	16	a			**10MU 300270**
280	300	16	a			**10MU 300280**
290	320	19	a			**10MU 320290**
300	320	16	a		**15MUE 320300**	**10MU 320300**
320	340	16	a		**15MUE 340320**	**10MU 340320**
340	360	16	a			**10MU 360340**
360	380	16	a		**15MUE 380360**	**10MU 380360**

All the alternative references **15MUE** have the profile a.

10MU seals with diameters between 20 and 1500 mm can be manufactured within short delivery time.
For prices and availability: **www.all-tec-business.net**

10EUS/I

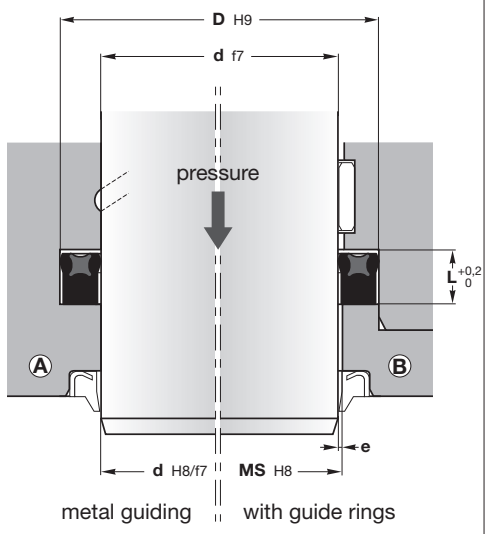

MS = d + 2e

Machining of housings: see pages 48-49

Pressure (MPa)	e (mm)	
	d ≤ 60 mm	**d** > 60 mm
5	≤ 0,4	≤ 0,5
10	≤ 0,3	≤ 0,4
20	≤ 0,2	≤ 0,3
30	≤ 0,15	≤ 0,2
40	≤ 0,1	≤ 0,15

10EUS/I is a standard loaded lip seal profile using a polyurethane energised by a high resilient X-ring.

At zero or low pressure the energising ring helps to increase the sealing force preventing any bypass. As pressure rises the sealing force increases and the **10QR** provides complete lip actuation under most conditions.

The precision trimmed sealing lips ensure optimum sealing action.

Operating conditions	**see page 8**
Pressure	≤ 40 MPa
Temperature	-30°C to 100°C
Speed	≤ 0,5 m/s
Fluids	**see pages 22-45**

Materials	**see pages 10-19**
Seal ①	PU26
Energising ring ②	NBR

Assembly	**see pages 54-59**
In closed grooves Ⓐ	
In open grooves Ⓑ	

Advantages

- Efficient sealing at high and low pressure
- Excellent abrasion resistance
- Good price-performance ratio
- Simple assembly
- Good resistance to clearance extrusion
- Very low compression set due to the **10QR**

Please contact us for applications approaching maximum values.

More information

On **www.all-tec-business.net**, click first on the reference and then on the material code to obtain the data sheet of the different materials.

For special requirements (fluid, temperature, pressure, speed...) or applications approaching maximum values, please contact us. Other materials available: **FPM**, **HNBR**, **TNBR**, **EPDM**...

d	D	L	Reference
6,35	12,7	3,5	**10EUS/I 025050**
9,52	15,88	3,5	**10EUS/I 037062**
	19,05	5,3	**10EUS/I 037075**
12,7	19,05	3,5	**10EUS/I 050075**
	25,4	7	**10EUS/I 050100/1**
	25,4	10,5	**10EUS/I 050100**
15,88	22,22	3,5	**10EUS/I 062087**
19,05	25,4	3,5	**10EUS/I 075100/2**
	25,4	5,3	**10EUS/I 075100**
	25,4	7	**10EUS/I 075100/1**
	28,57	8,7	**10EUS/I 075112**
	31,75	7	**10EUS/I 075125**
20,63	26,99	3,5	**10EUS/I 081106/1**
	26,99	5,3	**10EUS/I 081106**
22,22	28,57	3,5	**10EUS/I 087112/1**
	28,57	7	**10EUS/I 087112**
23,81	30,16	7	**10EUS/I 093118**
25,4	31,75	3,5	**10EUS/I 100125/1**
	31,75	5,3	**10EUS/I 100125**
	34,93	5,3	**10EUS/I 100137/1**
	34,93	8,7	**10EUS/I 100137**
	38,1	7	**10EUS/I 100150**
	44,45	10,5	**10EUS/I 100175**
28,57	34,93	3,5	**10EUS/I 112137**
	38,1	8,7	**10EUS/I 112150**
31,75	38,1	5,3	**10EUS/I 125150**
	38,1	7	**10EUS/I 125150/1**
	41,27	5,3	**10EUS/I 125162/3**
	41,27	7	**10EUS/I 125162**
	41,27	8,7	**10EUS/I 125162/1**
	41,27	10,5	**10EUS/I 125162/2**
	44,45	7	**10EUS/I 125175**
	44,45	10,5	**10EUS/I 125175/1**
	47,62	8,7	**10EUS/I 125187**
	47,62	10,5	**10EUS/I 125187/1**
	50,8	10,5	**10EUS/I 125200**
33,33	39,68	5,3	**10EUS/I 131156**

d	D	L	Reference
34,92	41,27	5,3	**10EUS/I 137162**
	44,45	7	**10EUS/I 137175/2**
	44,45	8,7	**10EUS/I 137175**
	44,45	10,5	**10EUS/I 137175/1**
	47,62	10,5	**10EUS/I 137187**
38,1	47,62	5,3	**10EUS/I 150187/1**
	47,62	7	**10EUS/I 150187**
	47,62	10,5	**10EUS/I 150187/2**
	50,8	7	**10EUS/I 150200**
	50,8	10,5	**10EUS/I 150200/1**
41,27	50,8	10,5	**10EUS/I 162200**
44,45	53,97	5,3	**10EUS/I 175212/3**
	53,97	7	**10EUS/I 175212**
	53,97	8,7	**10EUS/I 175212/2**
	53,97	10,5	**10EUS/I 175212/1**
	57,15	10,5	**10EUS/I 175225**
	60,32	14	**10EUS/I 175237**
47,62	57,15	5,3	**10EUS/I 187225**
	57,15	10,5	**10EUS/I 187225/1**
	60,32	10,5	**10EUS/I 187237**
	63,5	10,5	**10EUS/I 187250**
	66,67	10,5	**10EUS/I 187262**
50,8	60,32	5,3	**10EUS/I 200237/2**
	60,32	8,7	**10EUS/I 200237**
	60,32	10,5	**10EUS/I 200237/1**
	63,5	7	**10EUS/I 200250/1**
	63,5	10,5	**10EUS/I 200250**
	66,67	10,5	**10EUS/I 200262**
53,97	63,5	7	**10EUS/I 212250**
	63,5	10,5	**10EUS/I 212250/1**
	66,67	10,5	**10EUS/I 212262**
	69,85	10,5	**10EUS/I 212275**
57,15	66,67	5,3	**10EUS/I 225262/2**
	66,67	8,7	**10EUS/I 225262**
	66,67	10,5	**10EUS/I 225262/1**
	69,85	8,7	**10EUS/I 225275/1**
	69,85	10,5	**10EUS/I 225275**
	73,02	10,5	**10EUS/I 225287**

10EUS/I seals with diameters between 20 and 1500 mm can be manufactured within short delivery time.
For prices and availability: **www.all-tec-business.net**

10EUS/I

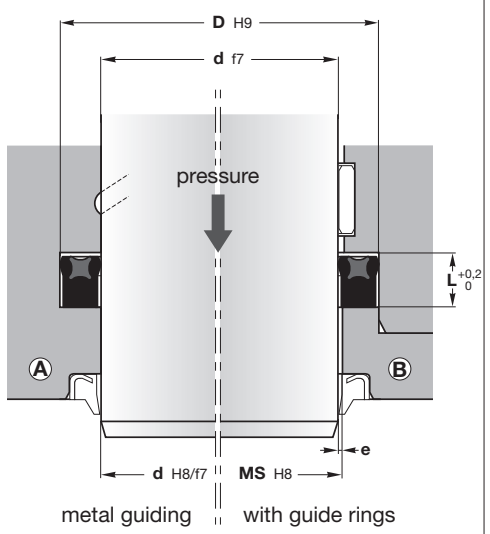

MS = d + 2e

Machining of housings: see pages 48-49

Pressure (MPa)	e (mm)	
	d ≤ 60 mm	**d** > 60 mm
5	≤ 0,4	≤ 0,5
10	≤ 0,3	≤ 0,4
20	≤ 0,2	≤ 0,3
30	≤ 0,15	≤ 0,2
40	≤ 0,1	≤ 0,15

More information

On **www.all-tec-business.net**, click first on the reference and then on the material code to obtain the data sheet of the different materials.

10EUS/I is a standard loaded lip seal profile using a polyurethane energised by a high resilient X-ring.

At zero or low pressure the energising ring helps to increase the sealing force preventing any bypass. As pressure rises the sealing force increases and the **10QR** provides complete lip actuation under most conditions.

The precision trimmed sealing lips ensure optimum sealing action.

d	D	L	Reference
60,32	69,85	5,3	**10EUS/I 237275**
	69,85	10,5	**10EUS/I 237275/1**
	73,02	10,5	**10EUS/I 237287**
63,5	73,02	8,7	**10EUS/I 250287**
	73,02	10,5	**10EUS/I 250287/1**
	76,2	7	**10EUS/I 250300**
	76,2	10,5	**10EUS/I 250300/1**
	79,37	14	**10EUS/I 250312**
	82,55	10,5	**10EUS/I 250325/1**
	82,55	17,5	**10EUS/I 250325**
66,67	76,2	5,3	**10EUS/I 262300**
	76,2	10,5	**10EUS/I 262300/1**
	79,37	10,5	**10EUS/I 262312**
69,85	82,55	10,5	**10EUS/I 275325**
	88,9	10,5	**10EUS/I 275350**
	88,9	17,5	**10EUS/I 275350/1**
73,02	85,72	10,5	**10EUS/I 287337**
	88,9	14	**10EUS/I 287350**
76,2	85,72	5,3	**10EUS/I 300337**
	85,72	10,5	**10EUS/I 300337/1**
	88,9	10,5	**10EUS/I 300350**
	92,07	10,5	**10EUS/I 300362**
	92,07	14	**10EUS/I 300362/1**
	95,25	17,5	**10EUS/I 300375**
79,37	88,9	10,5	**10EUS/I 312350**
	92,07	10,5	**10EUS/I 312362**
	95,25	14	**10EUS/I 312375**
82,55	95,25	10,5	**10EUS/I 325375**
	95,25	14	**10EUS/I 325375/1**
	101,6	10,5	**10EUS/I 325400/1**
	101,6	14	**10EUS/I 325400**

For special requirements (fluid, temperature, pressure, speed...) or applications approaching maximum values, please contact us. Other materials available: **FPM**, **HNBR**, **TNBR**, **EPDM**...

d	D	L	Reference
85,72	98,42	10,5	**10EUS/I 337387**
88,9	98,42	10,5	**10EUS/I 350387**
	101,6	10,5	**10EUS/I 350400**
	104,78	14	**10EUS/I 350412**
	107,95	10,5	**10EUS/I 350425/1**
	107,95	14	**10EUS/I 350425**
	107,95	17,5	**10EUS/I 350425/2**
	114,3	21	**10EUS/I 350450**
95,25	107,95	10,5	**10EUS/I 375425**
	107,95	15,7	**10EUS/I 375425/1**
	114,3	14	**10EUS/I 375450**
101,6	114,3	10,5	**10EUS/I 400450**
	114,3	15,7	**10EUS/I 400450/1**
	117,48	15,7	**10EUS/I 400462**
	120,65	14	**10EUS/I 400475**
	127	21	**10EUS/I 400500**
107,95	120,65	10,5	**10EUS/I 425475**
	120,65	15,7	**10EUS/I 425475/1**
	127	17,5	**10EUS/I 425500**
111,13	127	14	**10EUS/I 437500**
114,3	127	10,5	**10EUS/I 450500**
	133,35	17,5	**10EUS/I 450525**
	139,7	21	**10EUS/I 450550**
120,65	133,35	10,5	**10EUS/I 475525**
127	139,7	10,5	**10EUS/I 500550**
	146,05	17,5	**10EUS/I 500575**
	152,4	21	**10EUS/I 500600**
133,35	146,05	10,5	**10EUS/I 525575**
	152,4	17,5	**10EUS/I 525600**

d	D	L	Reference
136,52	149,1	7	**10EUS/I 537587**
139,7	152,4	10,5	**10EUS/I 550600**
	158,75	17,5	**10EUS/I 550625**
	165,1	21	**10EUS/I 550650**
152,4	165,1	15,7	**10EUS/I 600650**
	171,45	14	**10EUS/I 600675/1**
	171,45	17,5	**10EUS/I 600675**
	177,8	21	**10EUS/I 600700**
158,75	171,45	14	**10EUS/I 625675**
	177,8	10,5	**10EUS/I 625700/1**
	177,8	17,5	**10EUS/I 625700**
161,92	177,8	8,7	**10EUS/I 637700**
165,1	177,8	15,7	**10EUS/I 650700**
	184,15	10,5	**10EUS/I 650725**
	184,15	17,5	**10EUS/I 650725/1**
	190,5	21	**10EUS/I 650750**
171,45	184,15	10,5	**10EUS/I 675725**
177,8	190,5	15,7	**10EUS/I 700750**
	196,85	14	**10EUS/I 700775**
	196,85	17,5	**10EUS/I 700775/1**
	203,2	14	**10EUS/I 700800/1**
	203,2	21	**10EUS/I 700800**
190,5	203,2	15,7	**10EUS/I 750800**
	209,55	14	**10EUS/I 750825**
203,2	215,9	15,7	**10EUS/I 800850**
	228,6	21	**10EUS/I 800900**
215,9	228,6	15,7	**10EUS/I 850900**
	241,3	21	**10EUS/I 850950**

10EUS/I seals with diameters between 20 and 1500 mm can be manufactured within short delivery time.
For prices and availability: **www.all-tec-business.net**

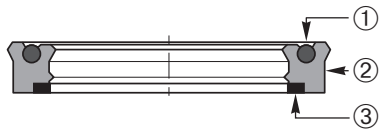

10EUS.../LA

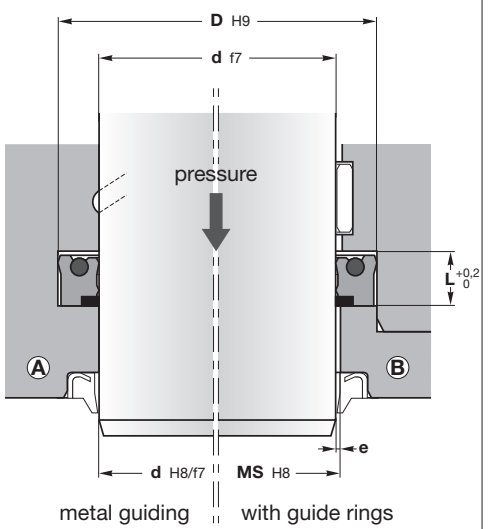

MS = d + 2e

Machining of housings: see pages 48-49

Pressure (MPa)	e (mm)	
	d ≤ 60 mm	**d** > 60 mm
5	≤ 0,6	≤ 0,8
10	≤ 0,6	≤ 0,8
20	≤ 0,4	≤ 0,6
30	≤ 0,3	≤ 0,4
40	≤ 0,2	≤ 0,3
50	≤ 0,1	≤ 0,15

10EUS.../LA heavy duty rod seals offer perfect sealing in heavy duty applications thanks to the their double sealing lips and POM back-up ring.

The NBR O-ring guarantees the maximum sealing performance even at very low pressure.

Operating conditions	**see page 8**
Pressure	≤ 50 MPa
Temperature	-30°C to 100°C
Speed	≤ 0,5 m/s
Fluids	**see pages 22-45**

Materials	**see pages 10-19**
Energising ring ①	NBR
Seal ②	PU10
Anti-extrusion ring ③	POM

Assembly	**see pages 54-59**
In closed grooves Ⓐ	
In open grooves Ⓑ	

Advantages

- Efficient sealing at high and low pressure
- Excellent abrasion resistance
- Unaffected by sudden loads and high pressure
- Simple assembly
- Good resistance to clearance extrusion
- Very low compression set due to the O-ring
- The integrated anti-extrusion ring prevents the sealing material from extrusion at higher pressure

Please contact us for applications approaching maximum values.

More information

On **www.all-tec-business.net**, click first on the reference and then on the material code to obtain the data sheet of the different materials.

For special requirements (fluid, temperature, pressure, speed...) or applications approaching maximum values, please contact us. Other materials available: **FPM**, **HNBR**, **TNBR**, **EPDM**...

d	D	L	Reference
40	55	12,5	**10EUS 4055/LA**
45	60	12,5	**10EUS 4560/LA**
50	59	11	**10EUS 5059/LA**
	65	12,5	**10EUS 5065/LA**
55	70	12,5	**10EUS 5570/LA**
60	75	12,5	**10EUS 6075LA**
65	80	12,5	**10EUS 6580/LA**
70	85	12,5	**10EUS 7085/LA**
75	90	11	**10EUS 7590/LA1**
	90	12,5	**10EUS 7590/LA**
80	95	12,5	**10EUS 8095/LA**
85	100	11	**10EUS 85100/LA1**
	100	12,5	**10EUS 85100/LA**
	105	16	**10EUS 85105/LA**
90	105	11	**10EUS 90105/LA1**
	105	12,5	**10EUS 90105/LA**
95	110	11	**10EUS 95110/LA1**
	110	12,5	**10EUS 95110/LA**
	110	13	**10EUS 95110/LA**
	115	16	**10EUS 95115/LA**
100	115	11	**10EUS 100115/LA1**
	115	12,5	**10EUS 100115/LA**
	115	13	**10EUS 100115/LA**
	120	16	**10EUS 100120/LA**
105	120	13	**10EUS 105120/LA**
110	125	13	**10EUS 110125/LA**
	130	13	**10EUS 110130/LA1**
	130	16	**10EUS 110130/LA**
115	135	16	**10EUS 115135/LA**
120	140	13	**10EUS 120140/LA**
	140	16	**10EUS 120140/LA1**
125	145	16	**10EUS 125145/LA**
130	150	16	**10EUS 130150/LA**
140	160	16	**10EUS 140160/LA**
150	170	16	**10EUS 150170/LA**

10EUS.../LA seals with diameters between 20 and 1500 mm can be manufactured within short delivery time.
For prices and availability: **www.all-tec-business.net**

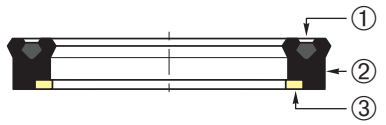

10EUS.../NEI

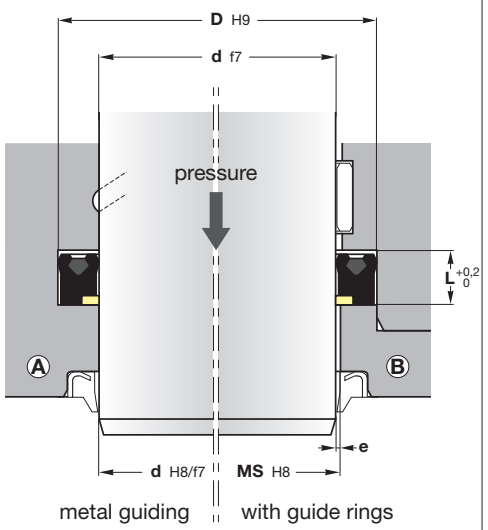

MS = d + 2e

Machining of housings: see pages 48-49

Pressure (MPa)	e (mm)	
	d ≤ 60 mm	**d** > 60 mm
5	≤ 0,6	≤ 0,8
10	≤ 0,6	≤ 0,8
20	≤ 0,4	≤ 0,6
30	≤ 0,3	≤ 0,4
40	≤ 0,2	≤ 0,3
50	≤ 0,1	≤ 0,15

10EUS.../NEI heavy duty rod seals offer perfect sealing in heavy duty applications thanks to the high quality of the polyurethan and the hard PU back-up ring.

The NBR energising ring guarantees the maximum sealing performance even at very low pressure.

Operating conditions	**see page 8**
Pressure	≤ 50 MPa
Temperature	-30°C to 100°C
Speed	≤ 0,5 m/s
Fluids	**see pages 22-45**

Materials	**see pages 10-19**
Energising ring ①	NBR
Seal ②	PU26
Anti-extrusion ring ③	PU 75 Sh D

Assembly	**see pages 54-59**
In closed grooves Ⓐ	
In open grooves Ⓑ	

Advantages

- Efficient sealing at high and low pressure
- Excellent abrasion resistance
- Unaffected by sudden loads and high pressure
- Simple assembly
- Good resistance to clearance extrusion
- Very low compression set due to the O-ring
- The integrated anti-extrusion ring prevents the sealing material from extrusion at higher pressure

Please contact us for applications approaching maximum values.

More information

On **www.all-tec-business.net**, click first on the reference and then on the material code to obtain the data sheet of the different materials.

d	D	L	Reference
20	28	6,3	**EUS 2028/NEI**
22	30	6,3	**10EUS 2230/NEI**
25	33	6,3	**10EUS 2533/NEI**
28	38	8	**10EUS 2838/NEI**
32	42	8	**10EUS 3242/NEI**
36	46	8	**10EUS 3646/NEI**
40	50	8	**10EUS 4050/NEI**
45	55	8	**10EUS 4555/NEI**
50	60	8	**10EUS 5060/NEI**
56	71	12,5	**10EUS 5671/NEI**
60	75	12,5	**10EUS 6075/NEI**
63	78	12,5	**10EUS 6378/NEI**
65	80	12,5	**10EUS 6580/NEI**
70	85	12,5	**10EUS 7085/NEI**
75	90	12,5	**10EUS 7590/NEI**
80	95	12,5	**10EUS 8095/NEI**
85	100	12,5	**10EUS 85100/NEI**
90	105	12,5	**10EUS 90105/NEI**
95	110	12,5	**10EUS 95110/NEI**
100	120	16	**10EUS 100120/NEI**
110	130	16	**10EUS 110130/NEI**
125	145	16	**10EUS 125145/NEI**
140	160	16	**10EUS 140160/NEI**
160	185	20	**10EUS 160185/NEI**
180	205	20	**10EUS 180205/NEI**
200	225	20	**10EUS 200225/NEI**

For special requirements (fluid, temperature, pressure, speed...) or applications approaching maximum values, please contact us. Other materials available: **FPM**, **HNBR**, **TNBR**, **EPDM**...

10EUS.../NEI seals with diameters between 20 and 1500 mm can be manufactured within short delivery time.
For prices and availability: **www.all-tec-business.net**

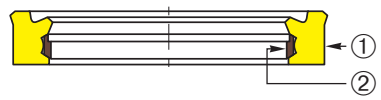

12TDI

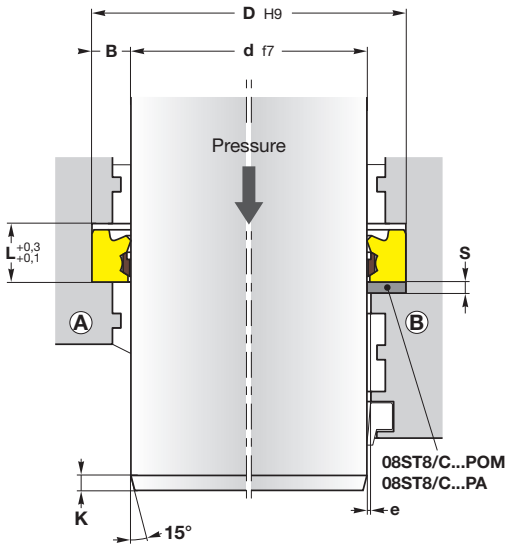

Machining of housings: see pages 48-49

Diameter (mm)	Construction Ⓐ	Construction Ⓑ	
	P ≤ 36 MPa	P ≤ 63 MPa	
	e (mm)	**S** (mm)	**e** (mm)
0 - 55	0,3	1	0,4
56 - 115	0,35	2	0,6
120 - 300	0,4	2	0,6
> 300	0,5	3	1

12TDI seal consists of 2 parts, an external elastic ring of PUR with a sealing lip and an internal slide ring of abrasion resistant PTFE-Bronze compound with a sealing edge.

Prior to fitting, the sealing lip protrudes beyond the nominal diameter of the seal and when fitted is pressed against the piston rod. Effective sealing is thereby provided at zero pressure.

Operating conditions	see page 8
Pressure	
construction Ⓐ	≤ 36 MPa
construction Ⓑ	≤ 63 MPa
Temperature	-35°C to 100°C
Speed	≤ 1 m/s
Fluids	see pages 22-45

Materials	see pages 10-19
Seal ①	PU
Ring ②	PTFE-bronze

Assembly	see pages 54-59
In closed housings	

Advantages

- Compact seal : no loss of space
- Low friction
- Simple assembly
- Efficient sealing at high and low pressure
- Excellent abrasion resistance

Please contact us for applications approaching maximum values.

More information

On **www.all-tec-business.net**, click first on the reference and then on the material code to obtain the data sheet of the different materials.

For special requirements (fluid, temperature, pressure, speed...) or applications approaching maximum values, please contact us. Other materials available: **FPM**, **HNBR**, **TNBR**, **EPDM**...

d	D	L	K	HUNGER reference	Reference
20	28	7,5	6	010003	12TDI 20
22	30	7,5	6	010004	12TDI 22
25	33	7,5	6	010006	12TDI 25
28	36	7,5	6	010007	12TDI 28
30	38	7,5	6	010008	12TDI 30
32	40	7,5	6	010009	12TDI 32
36	44	8,5	6	010011	12TDI 36
40	48	8,5	6	010012	12TDI 40
45	55	11	6	010016	12TDI 45
50	60	11	6	010018	12TDI 50
55	65	11	6	010021	12TDI 55
56	71	13	6	010022	12TDI 56
60	75	13	7	010024	12TDI 60
63	78	13	7	010025	12TDI 63
70	85	13	7	010028	12TDI 70
	85	13	7	020051	12TDI 70 FPM
80	95	13	7	010032	12TDI 80
	95	13	7	020057	12TDI 80 FPM
85	100	13	7	010034	12TDI 85
90	105	13	7	010036	12TDI 90
95	110	13	7	010037	12TDI 95
100	115	13	7	010039	12TDI 100
	115	13	7	020069	12TDI 100 FPM
	120	15	7	016189	12TDI 100/1
110	125	13	10	010041	12TDI 110
115	130	13	10	010042	12TDI 115
120	140	17	10	010044	12TDI 120
125	145	17	10	010045	12TDI 125

d	D	L	K	HUNGER reference	Reference
130	150	17	10	010047	12TDI 130
140	160	17	10	010050	12TDI 140
150	170	16	10	010054	12TDI 150
160	180	17	10	019650	12TDI 160
170	190	17	10	010059	12TDI 170
180	200	17	10	010061	12TDI 180
185	205	17	10	016163	12TDI 185
190	210	17	10	010062	12TDI 190
200	220	17	10	010063	12TDI 200
220	240	17	10	010067	12TDI 220
225	245	17	10	010068	12TDI 225
240	260	17	10	010070	12TDI 240
250	270	17	10	010072	12TDI 250
260	280	17	10	010073	12TDI 260
280	300	17	10	010075	12TDI 280
290	310	17	10	010076	12TDI 290
300	320	17	15	010077	12TDI 300
320	350	21	15	010078	12TDI 320
350	380	21	15	010079	12TDI 350
360	390	21	15	010080	12TDI 360
370	400	21	15	016177	12TDI 370
380	410	21	15	010081	12TDI 380
450	480	21	15	010086	12TDI 450
470	500	21	15	070235	12TDI 470
530	560	21	15	076404	12TDI 530

Further dimensions on request

12TDI seals with diameters between 20 and 1500 mm can be manufactured within short delivery time.
For prices and availability: **www.all-tec-business.net**

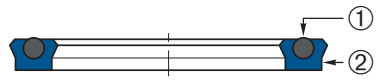

10EUS/C

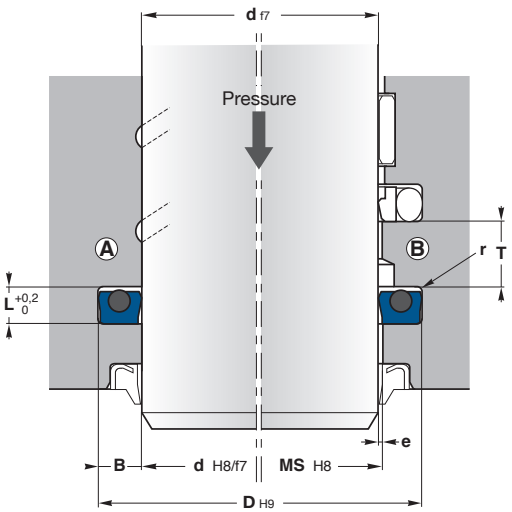

metal guiding | with guide rings

MS = d + 2e

T ≥ B

Machining of housings: see pages 48-49

Pressure (MPa)	e (mm)
≤ 16	≤ 0,6
≤ 25	≤ 0,5

ATTENTION: The 10EUS/C seal may be assembled in the groove of the standard 10I/GR seal.

10EUS/C seal type has been developed to replace or work jointly with stepseals in PTFE, and has the same groove dimensions.

The PU seal has a round groove where an O-ring can be inserted and housed. The O-ring acts as an energiser for the static and dynamic sealing lips even without pressure.

This profile also has excellent results at very low speed and pressure, because of the low friction and the energiser.

Operating conditions — see page 8

Pressure Ⓐ	≤ 25 MPa
In tandem with **10I/GR...B** or **17RS** Ⓑ	≤ 50 MPa
Temperature	-30°C to 100°C
Speed	≤ 0,5 m/s
Fluids	see pages 22-45

Materials — see pages 10-19

Energising ring ①	NBR 70 Sh A
Seal ②	PU

Assembly — see pages 54-59

In closed grooves Ⓐ

Secondary seal in tandem with **10I/GR...B** or **17RS** Ⓑ

Advantages

- Efficient sealing at high and low pressure
- Excellent abrasion resistance
- Good price-performance ratio
- Simple assembly
- Good resistance to clearance extrusion
- Very low compression set due to the O-ring

Please contact us for applications approaching maximum values.

More information

On **www.all-tec-business.net**, click first on the reference and then on the material code to obtain the data sheet of the different materials.

For special requirements (fluid, temperature, pressure, speed...) or applications approaching maximum values, please contact us. Other materials available: **FPM**, **HNBR**, **TNBR**, **EPDM**...

d	D	L	r	O-ring NBR 70 Sh A	Reference
12	19,5	3,2	0,5		**10EUS/C 12**
14	21,5	3,2	0,5		**10EUS/C 14**
16	23,5	3,2	0,5		**10EUS/C 16**
18	25,5	3,2	0,5		**10EUS/C 18**
20	27,5	3,2	0,5		**10EUS/C 20**
	31	4,2	0,5	23,47 x 2,62	**10EUS/C 20/1**
22	29,5	3,2	0,5		**10EUS/C 22**
	33	4,2	0,5	25,07 x 2,62	**10EUS/C 22/1**
25	32,5	3,2	0,5		**10EUS/C 25**
	36	4,2	0,5	28,24 x 2,62	**10EUS/C 25/1**
28	39	4,2	0,5	31,42 x 2,62	**10EUS/C 28**
32	43	4,2	0,5	36,17 x 2,62	**10EUS/C 32**
36	47	4,2	0,5	39,34 x 2,62	**10EUS/C 36**
40	51	4,2	0,5	44,12 x 2,62	**10EUS/C 40**
	55,5	6,3	0,9	44,04 x 3,53	**10EUS/C 40/1**
45	56	4,2	0,5	48,90 x 2,62	**10EUS/C 45**
	60,5	6,3	0,9	50,39 x 3,53	**10EUS/C 45/1**
50	61	4,2	0,5	53,64 x 2,62	**10EUS/C 50**
	65,5	6,3	0,9	53,57 x 3,53	**10EUS/C 50/1**
55	66	4,2	0,5	58,42 x 2,62	**10EUS/C 55**
	70,5	6,3	0,9	59,92 x 3,53	**10EUS/C 55/1**
56	67	4,2	0,5	59,99 x 2,62	**10EUS/C 56**
	71,5	6,3	0,9	59,92 x 3,53	**10EUS/C 56/1**

d	D	L	r	O-ring NBR 70 Sh A	Reference
63	74	4,2	0,5	66,34 x 2,62	**10EUS/C 63**
	78,5	6,3	0,9	66,27 x 3,53	**10EUS/C 63/1**
65	80,5	6,3	0,9	69,44 x 3,53	**10EUS/C 65**
70	85,5	6,3	0,9	75,79 x 3,53	**10EUS/C 70**
75	86	4,2	0,5	82,22 x 2,62	**10EUS/C 75**
	90,5	6,3	0,9	82,14 x 3,53	**10EUS/C 75/1**
80	95,5	6,3	0,9	85,32 x 3,53	**10EUS/C 80**
90	105,5	6,3	0,9	94,84 x 3,53	**10EUS/C 90**
95	110,5	6,3	0,9	101,19 x 3,53	**10EUS/C 95**
100	115,5	6,3	0,9	104,37 x 3,53	**10EUS/C 100**
105	120,5	6,3	0,9	110,72 x 3,53	**10EUS/C 105**
110	125,5	6,3	0,9	113,89 x 3,53	**10EUS/C 110**
130	145,5	6,3	0,9	132,94 x 3,53	**10EUS/C 130**
135	150,5	6,3	0,9	139,29 x 3,53	**10EUS/C 135**
140	155,5	6,3	0,9	145,64 x 3,53	**10EUS/C 140**
145	160,5	6,3	0,9	151,99 x 3,53	**10EUS/C 145**
150	165,5	6,3	0,9	158,34 x 3,53	**10EUS/C 150**
160	175,5	6,3	0,9	164,69 x 3,53	**10EUS/C 160**
180	195,5	6,3	0,9	183,74 x 3,53	**10EUS/C 180**
190	205,5	6,3	0,9	196,44 x 3,53	**10EUS/C 190**

ATTENTION: The **10EUS/C** seal may also be assembled in the groove of the standard **10I/GR** or **17RR** seal.

10EUS/C seals with diameters between 20 and 1500 mm can be manufactured within short delivery time.
For prices and availability: **www.all-tec-business.net**

ALL-TEC SEALING SYSTEMS

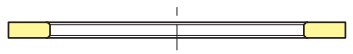

10BUF

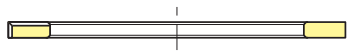

10BUF.../S

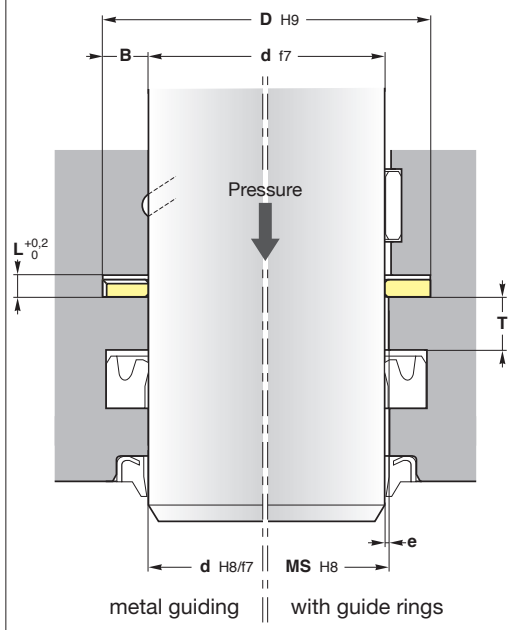

e (mm) ≤ 0,35

MS = d + 2e

T ≥ B

Machining of housings: see pages 48-49

10BUF buffer seals are used as the first sealing element in hydraulic cylinders for rods. They consist of high performanced PU ring.

Some sizes (**10BUF.../S**) include a radial and axial slot, which faces the pressure, to relieve back pressure.

10BUF buffer seals must be combined with other sealing elements.

This simple design is commonly found on older construction equipment.

Operating conditions	**see page 8**
Pressure	≤ 40 MPa
Temperature	-30°C to 100°C
Speed	≤ 0,5 m/s
Fluids	**see pages 22-45**

Materials	**see pages 10-19**
Seal	PU

Assembly **see pages 54-59**

In closed grooves

Pay attention to assemble the **10BUF.../S** with the slot facing the pressure.

Advantages

Small section

To use only as “buffer” seal (primary rod seal)

Low friction

Excellent abrasion and wear resistance

Please contact us for applications approaching maximum values.

More information

On **www.all-tec-business.net**, click first on the reference and then on the material code to obtain the data sheet of the material.

Metric dimensions			
d	**D**	**L**	**Reference**
25	33,6	2,6	**10BUF 25**
30	41	3,2	**10BUF 30**
35	46	3,2	**10BUF 35**
	48	3,3	**10BUF 35/1**
40	48	3,3	**10BUF 40**
50	58	3,2	**10BUF 50**
	62	3,3	**10BUF 50/1**
	62,6	4,3	**10BUF 50/2**
56	68,6	4,3	**10BUF 56**
	70	3,3	**10BUF 56/1**
	73	5,1	**10BUF 56/2**
63	80	4,7	**10BUF 63**
65	78	4,3	**10BUF 65**
70	83	4,3	**10BUF 70**
	83,5	3,3	**10BUF 70/1**
	84	3,3	**10BUF 70/2**
75	88	4,3	**10BUF 75**
80	93	4,3	**10BUF 80**
90	104	4,3	**10BUF 90**
100	113	4,3	**10BUF 100**

Inch dimensions			
d	**D**	**L**	**Reference**
31,75	41,15	3,3	**10BUF 1250**
	44,96	2,9	**10BUF 1250/1/S**
38,1	50,8	3,3	**10BUF 1500/S**
44,45	57,15	3,3	**10BUF 1750/S**
50,8	63,5	3,3	**10BUF 2000/S**
57,15	72,9	5,1	**10BUF 2250/S**
63,5	79,25	5,1	**10BUF 2500/S**
76,2	91,95	5,1	**10BUF 3000/S**
101,96	111,25	4,83	**10BUF 4000**
114,3	132,59	4,32	**10BUF 4500**
152,4	170,69	4,32	**10BUF 6000**

For special requirements (fluid, temperature, pressure, speed...) or applications approaching maximum values, please contact us. Other materials available: **PU22**, **PU30**...

10BUF seals with diameters between 20 and 1500 mm can be manufactured within short delivery time.
For prices and availability: **www.all-tec-business.net**

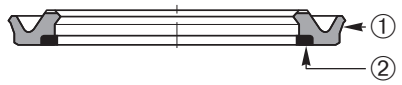

10IBF

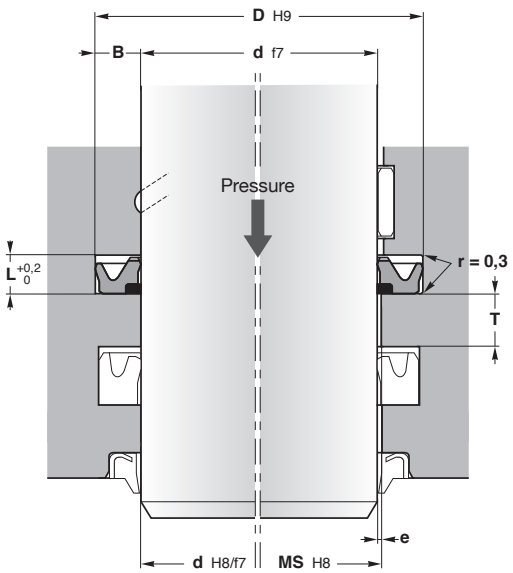

e (mm) ≤ 0,35

MS = d + 2e

T ≥ B

Machining of housings: see pages 48-49

10IBF buffer seals are used as the first sealing element in hydraulic cylinders and rod. They consist of high performanced PU and POM support ring.

10IBF buffer seals must be combined with other sealing elements.

Operating conditions	see page 8
Pressure	≤ 40 MPa
Temperature	-30°C to 100°C
Speed	≤ 0,5 m/s
Fluids	see pages 22-45

Materials	see pages 10-19
Seal ①	PU
Anti-extrusion ring ②	POM

Assembly see pages 54-59

In closed grooves

Pay attention to assemble the anti-extrusion ring in the right way

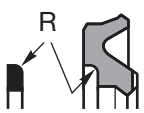

Advantages

Small section

To use only as “buffer” seal (primary rod seal)

Low friction

Excellent abrasion and wear resistance

The integrated anti-extrusion ring prevents the seal material from extrusion at higher pressure

Please contact us for applications approaching maximum values.

More information

On **www.all-tec-business.net**, click first on the reference and then on the material code to obtain the data sheet of the different materials.

ALL-TEC SEALING SYSTEMS

d	D	L	Reference
40	55,5	6,3	**10IBF 40**
45	60,5	6,3	**10IBF 45**
50	65,5	6,3	**10IBF 50**
55	70,5	6,3	**10IBF 55**
56	71,5	6,3	**10IBF 56**
60	75,5	6,3	**10IBF 60**
63	78,5	6,3	**10IBF 63**
65	80,5	6,3	**10IBF 65**
70	85,5	6,3	**10IBF 70**
75	90,5	6,3	**10IBF 75**
80	95,5	6,3	**10IBF 80**
85	100,5	6,3	**10IBF 85**
90	105,5	6,3	**10IBF 90**
95	110,5	6,3	**10IBF 95**
100	115,5	6,3	**10IBF 100**

d	D	L	Reference
105	120,5	6,3	**10IBF 105**
110	125,5	6,3	**10IBF 110**
115	130,5	6,3	**10IBF 115**
120	135,5	6,3	**10IBF 120**
125	140,5	6,3	**10IBF 125**
130	145,5	6,3	**10IBF 130**
135	150,5	6,3	**10IBF 135**
140	155,5	6,3	**10IBF 140**
150	165,5	6,3	**10IBF 150**
155	170,5	6,3	**10IBF 155**
160	175,5	6,3	**10IBF 160**
170	185,5	6,3	**10IBF 170**
180	195,5	6,3	**10IBF 180**
200	220,5	8,1	**10IBF 200**

The **10IBF** seal may also be assembled in the groove of the standard **10I/GR** seal (**D** -0,4 mm).

For special requirements (fluid, temperature, pressure, speed...) or applications approaching maximum values, please contact us. Other materials available: **PU22**, **PU30**...

10IBF seals with diameters between 20 and 1500 mm can be manufactured within short delivery time.
For prices and availability: **www.all-tec-business.net**

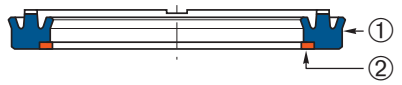

10IBU

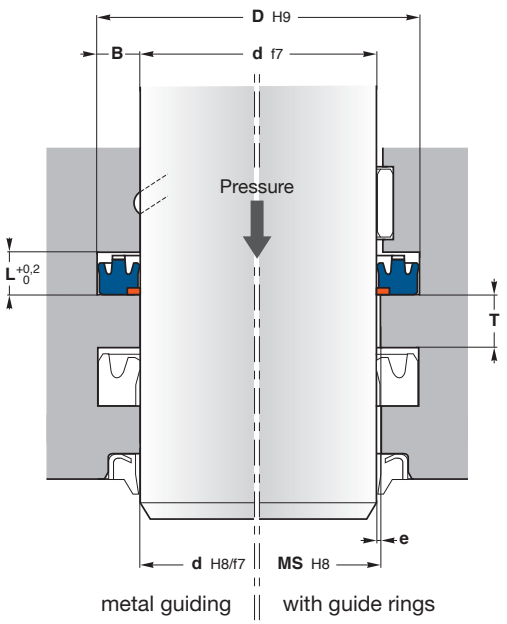

e (mm) ≤ 0,35

MS = d + 2e

T ≥ B

Machining of housings: see pages 48-49

10IBU U-ring is produced in a compact design which guarantees good functioning at low pressures and guarantees a particularly long service life. **10IBU** is a single-acting rod seal. The semi-active back-up ring on the inner diameter prevents gap extrusion on the side facing away from the pressure.

Operating conditions	**see page 8**
Pressure	≤ 50 MPa
Temperature	-40°C to 100°C
Speed	≤ 0,5 m/s
Fluids	**see pages 22-45**

Materials	**see pages 10-19**
Seal ①	PU10
Anti-extrusion ring ②	POM

Assembly **see pages 54-59**

In closed grooves

Advantages

- Small section
- To use as “buffer seal” (primary rod seal)
- Easy installation
- Simple groove design and space-saving construction
- Excellent wear-resistance
- High resistance against extrusion
- Good temperature resistance

Please contact us for applications approaching maximum values.

More information

On **www.all-tec-business.net**, click first on the reference and then on the material code to obtain the data sheet of the different materials.

For special requirements (fluid, temperature, pressure, speed...) or applications approaching maximum values, please contact us. Other materials available: **PU22**, **PU30**...

d	D	L	Reference
60	75	9,5	**10IBU 60**
65	80	9,5	**10IBU 65**
70	85	9,5	**10IBU 70**
75	90	9,5	**10IBU 75**
80	95	9,5	**10IBU 80**
90	105	9,5	**10IBU 90**

10IBU seals with diameters between 20 and 1500 mm can be manufactured within short delivery time.
For prices and availability: **www.all-tec-business.net**

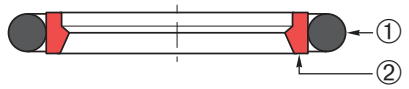

10I/GH

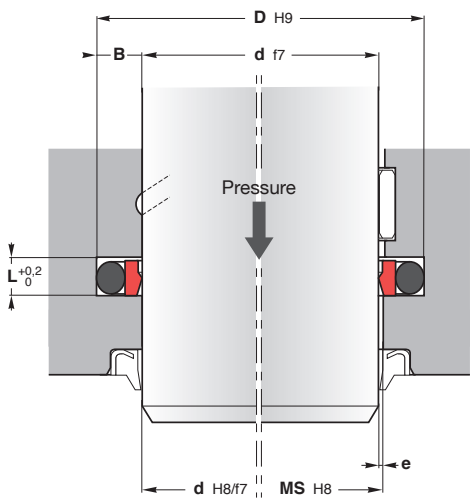

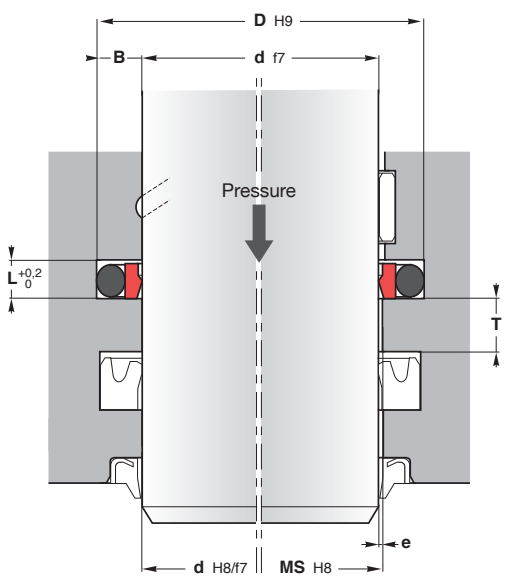

metal guiding | with guide rings

MS = d + 2e

T ≥ B

Machining of housings: see pages 48-49

10I/GH consists of a TPE face ring and a rubber O-ring energiser. The seal can be used as main sealing element in application up to 25 MPa / 3500 p.s.i. In applications where pressure peaks occur or in high speed applications it is recommended to use the seal **in tandem** with the 10I/GR seal.

The wear resistant thermoplastic polyester elastomer (TPE) ring is energised by an O-ring. **10I/GH** is also available in a modified design developed for rotary and swivelling applications, such as swivel joints on mobile hydraulic equipment.

Operating conditions	**see page 8**
Pressure	≤ 50 MPa
Temperature	-30°C to 100°C
Speed	≤ 0,5 m/s (at 100°C) ≤ 1 m/s (at 80°C)
Fluids	**see pages 22-45**

Materials	**see pages 10-19**
Energising element ①	NBR 70 Sh A
Dynamic sealing element ②	TPE

Assembly	**see pages 54-59**
In closed grooves	

Advantages

- Good sealing performance
- Good price-performance ratio compared to the corresponding PTFE seal
- Easy installation
- Low friction and no tendency of stick-slip
- Returns to the size immediately after assembly
- Simple groove design and space-saving construction
- Excellent wear-resistance
- High resistance against extrusion
- Extended service life

Please contact us for applications approaching maximum values.

Pressure	10 MPa	20 MPa	30 MPa	40 MPa
L (mm)	**e** (mm)			
2,2	0,35	0,23	0,18	0,15
3,2	0,4	0,25	0,2	0,15
4,2	0,4	0,25	0,2	0,18
6,3	0,45	0,28	0,23	0,18
8,1	0,55	0,35	0,25	0,2
> 40 MPa => **e** = H8/f8				

More information: on **www.all-tec-business.net**, click first on the reference and then on the material code to obtain the data sheet of the different materials.

d	D	L	O-ring NBR 70 Sh A	Reference
10	14,9	2,2	01 178 1082	**10I/GH 10/L**
14	18,9	2,2	01 178 1400	**10I/GH 14/L**
16	20,9	2,2	01 178 1717	**10I/GH 16/L**
18	22,9	2,2	01 178 1877	**10I/GH 18/L**
20	27,3	3,2	01 262 2189	**10I/GH 20/L**
22	32,7	4,2	01 353 2657	**10I/GH 22**
24	34,7	4,2	01 353 2817	**10I/GH 24**
25	32,3	3,2	01 262 2824	**10I/GH 25/L**
25	35,7	4,2	01 353 2974	**10I/GH 25**
30	40,7	4,2	01 353 3452	**10I/GH 30**
32	39,3	3,2	01 262 3459	**10I/GH 32/L**
32	42,7	4,2	01 353 3609	**10I/GH 32**
35	45,7	4,2	01 353 3769	**10I/GH 35**
36	46,7	4,2	01 353 4087	**10I/GH 36**
40	50,7	4,2	01 353 4404	**10I/GH 40/L**
40	55,1	6,3	01 534 4382	**10I/GH 40**
45	55,7	4,2	01 353 4920	**10I/GH 45/L**
45	60,1	6,3	01 534 5017	**10I/GH 45**
50	60,7	4,2	01 353 5397	**10I/GH 50/L**
50	65,1	6,3	01 534 5652	**10I/GH 50**
56	66,7	4,2	01 353 5992	**10I/GH 56/L**
60	70,7	4,2	01 353 6350	**10I/GH 60/L**
60	75,1	6,3	01 534 6604	**10I/GH 60**
70	80,7	4,2	01 353 7460	**10I/GH 70/L**
70	85,1	6,3	01 534 7557	**10I/GH 70**
75	90,1	6,3	01 534 8192	**10I/GH 75**
78	93,1	6,3	01 534 8192	**10I/GH 78**
80	95,1	6,3	01 534 8509	**10I/GH 80**
90	105,1	6,3	01 534 9462	**10I/GH 90**
100	115,1	6,3	01 534 10414	**10I/GH 100**
110	125,1	6,3	01 534 11684	**10I/GH 110**

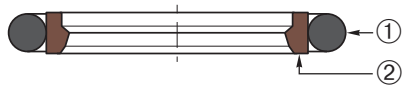

10I/GR...B

Example of item code

10I/GR 0800 B - 55/4470

Diameter **d** (mm x 10) | Profile ② | Material ②/①

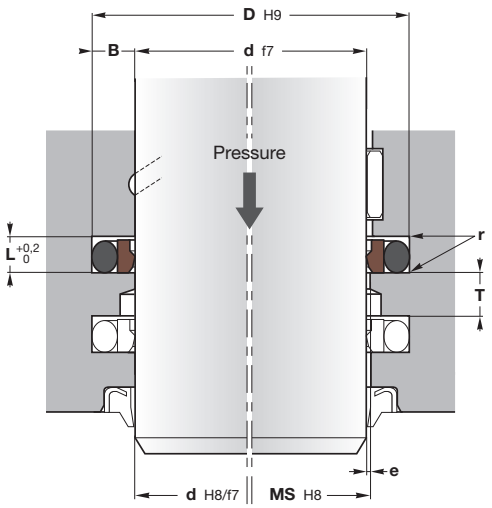

MS = d + 2e **T ≥ B**

Machining of housings: see pages 48-49

e (mm)			
L (mm)	0 - 20 MPa	20 - 40 MPa	> 40 MPa
2,2 - 3,2	0,15	0,1	H8/f7
4,2 - 6,3	0,25	0,15	
8,1	0,4	0,2	

d (mm)			r (mm)	L (mm)	D (mm)	O-ring C/S ①
10I/GR Standard serie	**10I/GR-L** Light serie	**10I/GR-P** Heavy serie				
3→7,9	8→18,9		0,4	2,2	d+4,9	1,78
8→18,9	19→37,9		0,6	3,2	+7,3	2,62
19→37,9	38→199,9	8→18,9	1,0	4,2	+10,7	3,53
38→199,9	200→255,9	19→37,9	1,3	6,3	+15,1	5,34
200→255,9	256→649,9	38→199,9	1,8	8,1	+20,5	7
256→649,9	650→999,9	200→255,9	1,8	8,1	+24	7
650→999,9	≥ 1000	256→649,9	2,5	9,5	+27,3	8,4
≥ 1000		650→999,9	3	13,8	+38	12

10I/GR...B rod seals are composed of a filled PTFE ring manufactured by machining technique combined with an O-ring that is used as an energising ring.

They are suitable for high sliding speeds due to the low friction force which is among one of the essential properties of PTFE material. Moreover, they can be used for different type of fluids by changing O-ring material.

Operating conditions

see page 8

Pressure	≤ 50 MPa
Temperature	-30°C to 100°C
Speed	≤ 15 m/s
Fluids	see pages 22-45

Materials

see pages 10-19

Energising element ①	NBR 70 Sh A
Dynamic sealing element ②	
10I/GR...B	PT55
10I/GR...B	PT15
15I/GR...B	PT53

Assembly

see pages 54-59

O-ring and PTFE-ring may easily be mounted into the grooved housings (above 12 mm)

Advantages

- Optimal sealing in tandem system
- Suitable as a primary seal (buffer)
- Small sections
- High extrusion resistance and long service life
- Low break-out and running friction
- Compatibility with nearly all media due to the high chemical resistance of the sealing element and the wide selection of O-ring compounds

Please contact us for applications approaching maximum values.

More information

On **www.all-tec-business.net**, click first on the reference and then on the material code to obtain the data sheet of the different materials.

For special requirements (fluid, temperature, pressure, speed...) or applications approaching maximum values, please contact us. Other **PTFE** and **elastomer** materials available.

10I/GR-L: Light serie
10I/GR-P: Heavy serie

d	D	L	O-ring NBR 70 Sh A	Alternative reference	Reference
5	9,9	2,2	6,35 x 1,78		**10I/GR 0050B-55/4470**
8	15,3	3,2	10,78 x 2,62		**10I/GR 0080B-55/4470**
10	14,9	2,2	12,42 x 1,78		**10I/GR-L 0100B-55/4470**
	17,3	3,2	12,37 x 2,62		**10I/GR 0100B-55/4470**
12	19,3	3,2	13,94 x 2,62		**10I/GR 0120B-55/4470**
14	21,3	3,2	17,12 x 2,62		**10I/GR 0140B-55/4470**
15	22,3	3,2	18 x 2,65		**10I/GR 0150B-55/4470**
16	23,3	3,2	18,72 x 2,62		**10I/GR 0160B-55/4470**
18	22,9	2,2	18,77 x 1,78		**10I/GR-L 0180B-55/4470**
	25,3	3,2	20,3 x 2,62		**10I/GR 0180B-55/4470**
20	27,3	3,2	22,23 x 2,62		**10I/GR-L 0200B-55/4470**
	30,7	4,2	23,39 x 3,53		**10I/GR 0200B-55/4470**
22	29,3	3,2	25,07 x 2,62		**10I/GR-L 0220B-55/4470**
	32,7	4,2	26,57 x 3,53	**15I/GR 0220B**	**10I/GR 0220B-55/4470**
24	34,7	4,2	28,17 x 3,53		**10I/GR 0240B-55/4470**
25	32,3	3,2	28,24 x 2,62		**10I/GR-L 0250B-55/4470**
	35,7	4,2	29,74 x 3,53	**15I/GR 0250B**	**10I/GR 0250B-55/4470**
28	35,3	3,2	29,82 x 2,62		**10I/GR-L 0280B-55/4470**
	38,7	4,2	32,92 x 3,53	**15I/GR 0280B**	**10I/GR 0280B-55/4470**
30	37,3	3,2	32,99 x 2,62		**10I/GR-L 0300B-55/4470**
	40,7	4,2	34,52 x 3,53	**15I/GR 0300B**	**10I/GR 0300B-55/4470**
32	39,3	3,2	34,59 x 2,62		**10I/GR-L 0320B-55/4470**
	42,7	4,2	36,09 x 3,53		**10I/GR 0320B-55/4470**
35	42,3	3,2	37,77 x 2,62		**10I/GR-L 0350B-55/4470**
	45,7	4,2	37,69 x 3,53	**15I/GR 0350B**	**10I/GR 0350B-55/4470**
36	43,3	3,2	39,34 x 2,62		**10I/GR-L 0360B-55/4470**
	46,7	4,2	40,87 x 3,53	**15I/GR 0360B**	**10I/GR 0360B-55/4470**
37	47,7	4,2	40,87 x 3,53		**10I/GR 0370B-55/4470**
38	53,1	6,3	43,82 x 5,34		**10I/GR 0380B-55/4470**
40	50,7	4,2	44,04 x 3,53	**15I/GR-L 0400B**	**10I/GR-L 0400B-55/4470**
	55,1	6,3	43,82 x 5,34	**15I/GR 0400B**	**10I/GR 0400B-55/4470**

10I/GR...B seals with diameters between 20 and 1500 mm can be manufactured within short delivery time.
For prices and availability: **www.all-tec-business.net**

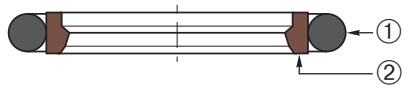

10I/GR...B

Example of item code

10I/GR 0800 B - 55/4470

Diameter **d** (mm x 10) | Profile ② | Material ②/①

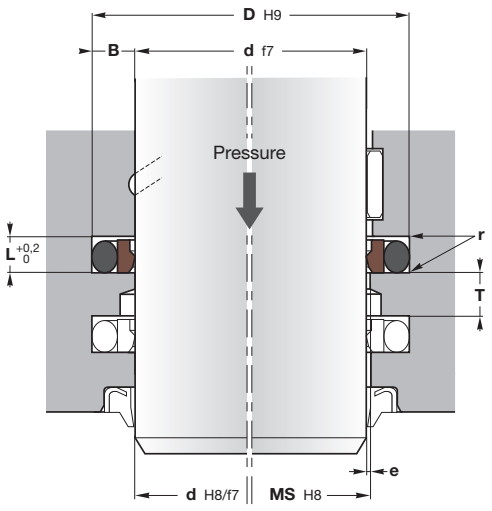

MS = d + 2e **T ≥ B**

Machining of housings: see pages 48-49

e (mm)			
L (mm)	0 - 20 MPa	20 - 40 MPa	> 40 MPa
2,2 - 3,2	0,15	0,1	H8/f7
4,2 - 6,3	0,25	0,15	
8,1	0,4	0,2	

d (mm)			r (mm)	L (mm)	D (mm)	O-ring C/S ①
10I/GR Standard serie	**10I/GR-L** Light serie	**10I/GR-P** Heavy serie				
3→7,9	8→18,9		0,4	2,2	d+4,9	1,78
8→18,9	19→37,9		0,6	3,2	+7,3	2,62
19→37,9	38→199,9	8→18,9	1,0	4,2	+10,7	3,53
38→199,9	200→255,9	19→37,9	1,3	6,3	+15,1	5,34
200→255,9	256→649,9	38→199,9	1,8	8,1	+20,5	7
256→649,9	650→999,9	200→255,9	1,8	8,1	+24	7
650→999,9	≥ 1000	256→649,9	2,5	9,5	+27,3	8,4
≥ 1000		650→999,9	3	13,8	+38	12

10I/GR...B rod seals are composed of a filled PTFE ring manufactured by machining technique combined with an O-ring that is used as an energising ring.

They are suitable for high sliding speeds due to the low friction force which is among one of the essential properties of PTFE material. Moreover, they can be used for different type of fluids by changing O-ring material.

Operating conditions

see page 8

Pressure	≤ 50 MPa
Temperature	-30°C to 100°C
Speed	≤ 15 m/s
Fluids	see pages 22-45

Materials

see pages 10-19

Energising element ①	NBR 70 Sh A
Dynamic sealing element ②	
10I/GR...B	PT55
10I/GR...B	PT15
15I/GR...B	PT53

Assembly

see pages 54-59

O-ring and PTFE-ring may easily be mounted into the grooved housings (above 12 mm)

Advantages

- Optimal sealing in tandem system
- Suitable as a primary seal (buffer)
- Small sections
- High extrusion resistance and long service life
- Low break-out and running friction
- Compatibility with nearly all media due to the high chemical resistance of the sealing element and the wide selection of O-ring compounds

Please contact us for applications approaching maximum values.

More information

On **www.all-tec-business.net**, click first on the reference and then on the material code to obtain the data sheet of the different materials.

For special requirements (fluid, temperature, pressure, speed...) or applications approaching maximum values, please contact us. Other **PTFE** and **elastomer** materials available.

10I/GR-L: Light serie
10I/GR-P: Heavy serie

d	D	L	O-ring NBR 70 Sh A	Alternative reference	Reference
42	52,7	4,2	47,22 x 3,53		**10I/GR-L 0420B-55/4470**
	57,1	6,3	46,99 x 5,34		**10I/GR 0420B-55/4470**
45	55,7	4,2	49,2 x 3,53	**15I/GR-L 0450B**	**10I/GR-L 0450B-55/4470**
	60,1	6,3	50,17 x 5,34	**15I/GR 0450B**	**10I/GR 0450B-55/4470**
48	63,1	6,3	53,34 x 5,34		**10I/GR 0480B-55/4470**
50	60,7	4,2	53,97 x 3,53		**10I/GR-L 0500B-55/4470**
	65,1	6,3	56,52 x 5,34		**10I/GR 0500B-15/4470**
	65,1	6,3	56,52 x 5,34	**15I/GR 0500B**	**10I/GR 0500B-55/4470**
52	67,1	6,3	56,52 x 5,34		**10I/GR 0520B-55/4470**
55	65,7	4,2	59,92 x 3,53	**15I/GR-L 0550B**	**10I/GR-L 0550B-55/4470**
	70,1	6,3	59,69 x 5,34	**15I/GR 0550B**	**10I/GR 0550B-55/4470**
56	66,7	4,2	59,92 x 3,53		**10I/GR-L 0560B-55/4470**
	71,1	6,3	62,87 x 5,34	**15I/GR 0560B**	**10I/GR 0560B-55/4470**
	76,5	8,1	63 x 7		**10I/GR-P 0560B-55/4470**
60	70,7	4,2	63,09 x 3,53	**15I/GR-L 0600B**	**10I/GR-L 0600B-55/4470**
	75,1	6,3	66,04 x 5,34	**15I/GR 0600B**	**10I/GR 0600B-55/4470**
63	73,7	4,2	66,27 x 3,53		**10I/GR-L 0630B-55/4470**
	78,1	6,3	69,22 x 5,34		**10I/GR 0630B-55/4470**
65	75,7	4,2	69,44 x 3,53		**10I/GR-L 0650B-55/4470**
	80,1	6,3	69,22 x 5,34	**15I/GR 0650B**	**10I/GR 0650B-55/4470**
70	80,7	4,2	74,6 x 3,53		**10I/GR-L 0700B-55/4470**
	85,1	6,3	75,57 x 5,34		**10I/GR 0700B-15/4470**
	85,1	6,3	75,57 x 5,34	**15I/GR 0700B**	**10I/GR 0700B-55/4470**
	90,5	8,1	78 x 7		**10I/GR-P 0700B-55/4470**
75	90,1	6,3	79,73 x 5,34	**15I/GR 0750B**	**10I/GR 0750B-55/4470**
	95,5	8,1	82 x 7		**10I/GR-P 0750B-55/4470**
80	90,7	4,2	85,32 x 3,53		**10I/GR-L 0800B-55/4470**
	95,1	6,3	85,09 x 5,34		**10I/GR 0800B-15/4470**
	95,1	6,3	85,09 x 5,34	**15I/GR 0800B**	**10I/GR 0800B-55/4470**
	100,5	8,1	89 x 7		**10I/GR-P 0800B-55/4470**
85	100,1	6,3	89,69 x 5,34	**15I/GR 0850B**	**10I/GR 0850B-55/4470**
	105,5	8,1	92 x 7		**10I/GR-P 0850B-55/4470**
90	100,7	4,2	94,84 x 3,53		**10I/GR-L 0900B-55/4470**
	105,1	6,3	94,62 x 5,34	**15I/GR 0900B**	**10I/GR 0900B-55/4470**
	110,5	8,1	98 x 7		**10I/GR-P 0900B-55/4470**

References printed in green are manufactured with a non-standard material

10I/GR...B seals with diameters between 20 and 1500 mm can be manufactured within short delivery time.
For prices and availability: **www.all-tec-business.net**

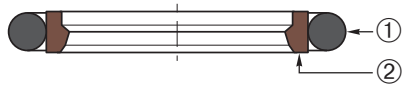

10I/GR...B

Example of item code

10I/GR 0800 B - 55/4470

Diameter **d** (mm x 10) | Profile ② | Material ②/①

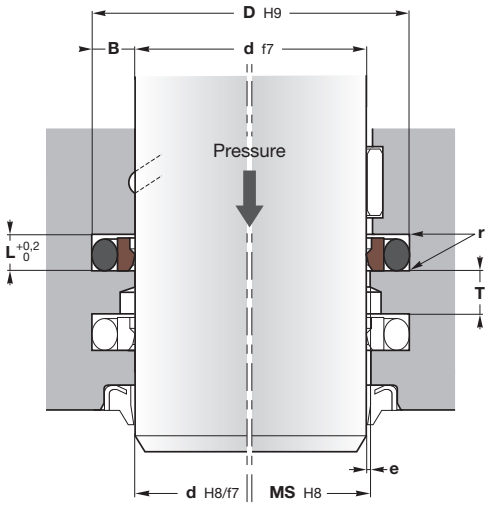

MS = d + 2e **T ≥ B**

Machining of housings: see pages 48-49

e (mm)			
L (mm)	0 - 20 MPa	20 - 40 MPa	> 40 MPa
2,2 - 3,2	0,15	0,1	H8/f7
4,2 - 6,3	0,25	0,15	
8,1	0,4	0,2	

d (mm)			r (mm)	L (mm)	D (mm)	O-ring C/S ①
10I/GR Standard serie	**10I/GR-L** Light serie	**10I/GR-P** Heavy serie				
3→7,9	8→18,9		0,4	2,2	d+4,9	1,78
8→18,9	19→37,9		0,6	3,2	+7,3	2,62
19→37,9	38→199,9	8→18,9	1,0	4,2	+10,7	3,53
38→199,9	200→255,9	19→37,9	1,3	6,3	+15,1	5,34
200→255,9	256→649,9	38→199,9	1,8	8,1	+20,5	7
256→649,9	650→999,9	200→255,9	1,8	8,1	+24	7
650→999,9	≥ 1000	256→649,9	2,5	9,5	+27,3	8,4
≥ 1000		650→999,9	3	13,8	+38	12

10I/GR...B rod seals are composed of a filled PTFE ring manufactured by machining technique combined with an O-ring that is used as an energising ring.

They are suitable for high sliding speeds due to the low friction force which is among one of the essential properties of PTFE material. Moreover, they can be used for different type of fluids by changing O-ring material.

Operating conditions	see page 8
Pressure	≤ 50 MPa
Temperature	-30°C to 100°C
Speed	≤ 15 m/s
Fluids	see pages 22-45

Materials	see pages 10-19
Energising element ①	NBR 70 Sh A
Dynamic sealing element ②	
10I/GR...B	PT55
10I/GR...B	PT15
15I/GR...B	PT53

Assembly see pages 54-59

O-ring and PTFE-ring may easily be mounted into the grooved housings (above 12 mm)

Advantages

- Optimal sealing in tandem system
- Suitable as a primary seal (buffer)
- Small sections
- High extrusion resistance and long service life
- Low break-out and running friction
- Compatibility with nearly all media due to the high chemical resistance of the sealing element and the wide selection of O-ring compounds

Please contact us for applications approaching maximum values.

More information

On **www.all-tec-business.net**, click first on the reference and then on the material code to obtain the data sheet of the different materials.

For special requirements (fluid, temperature, pressure, speed...) or applications approaching maximum values, please contact us. Other **PTFE** and **elastomer** materials available.

10I/GR-L: Light serie
10I/GR-P: Heavy serie

d	D	L	O-ring NBR 70 Sh A	Alternative reference	Reference
95	110,1	6,3	100,97 x 5,34	15I/GR 0950B	10I/GR 0950B-55/4470
	115,5	8,1	103 x 7		10I/GR-P 0950B-55/4470
100	110,7	4,2	104,37 x 3,53		10I/GR-L 1000B-55/4470
	115,1	6,3	107,32 x 5,34	15I/GR 1000B	10I/GR 1000B-55/4470
	120,5	8,1	108 x 7		10I/GR-P 1000B-55/4470
105	120,1	6,3	110,49 x 5,34		10I/GR 1050B-55/4470
	125,5	8,1	113,67 x 7		10I/GR-P 1050B-55/4470
110	120,7	4,2	113,89 x 3,53		10I/GR-L 1100B-55/4470
	125,1	6,3	116,84 x 5,34	15I/GR 1100B	10I/GR 1100B-55/4470
	130,5	8,1	116,84 x 7		10I/GR-P 1100B-55/4470
115	130,1	6,3	120,02 x 5,34		10I/GR 1150B-55/4470
120	135,1	6,3	126,37 x 5,34	15I/GR 1200B	10I/GR 1200B-55/4470
	140,5	8,1	129,54 x 7		10I/GR-P 1200B-55/4470
125	140,1	6,3	129,54 x 5,34	15I/GR 1250B	10I/GR 1250B-55/4470
	145,5	8,1	132,72 x 7		10I/GR-P 1250B-55/4470
130	140,7	4,2	132,94 x 3,53		10I/GR-L 1300B-55/4470
	145,1	6,3	135,89 x 5,34	15I/GR 1300B	10I/GR 1300B-55/4470
	150,5	8,1	139,07 x 7		10I/GR-P 1300B-55/4470
135	150,1	6,3	142,24 x 5,34		10I/GR 1350B-55/4470
140	155,1	6,3	145,42 x 5,34	15I/GR 1400B	10I/GR 1400B-55/4470
	160,5	8,1	148,59 x 7		10I/GR-P 1400B-55/4470
145	165,5	8,1	151,77 x 7		10I/GR-P 1450B-55/4470
150	165,1	6,3	155 x 5,34		10I/GR 1500B-55/4470
	170,5	8,1	158,12 x 7		10I/GR-P 1500B-55/4470
153	168,1	6,3	158,12 x 5,34		10I/GR 1530B-55/4470
160	175,1	6,3	164,47 x 5,34	15I/GR 1600B	10I/GR 1600B-55/4470
	180,5	8,1	166,7 x 7		10I/GR-P 1600B-55/4470
165	180,1	6,3	170,82 x 5,34		10I/GR 1650B-55/4470
170	185,1	6,3	177,17 x 5,34		10I/GR 1700B-55/4470
	190,5	8,1	177,17 x 7		10I/GR-P 1700B-55/4470
173	188,1	6,3	177,17 x 5,34		10I/GR 1730B-55/4470
180	195,1	6,3	183,52 x 5,34		10I/GR 1800B-55/4470
	200,5	8,1	187,3 x 7		10I/GR-P 1800B-55/4470

10I/GR...B seals with diameters between 20 and 1500 mm can be manufactured within short delivery time.
For prices and availability: **www.all-tec-business.net**

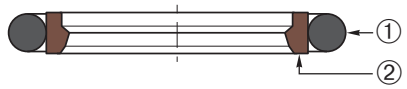

10I/GR...B

Example of item code

10I/GR 0800 B - 55/4470

Diameter **d** (mm x 10) | Profile ② | Material ②/①

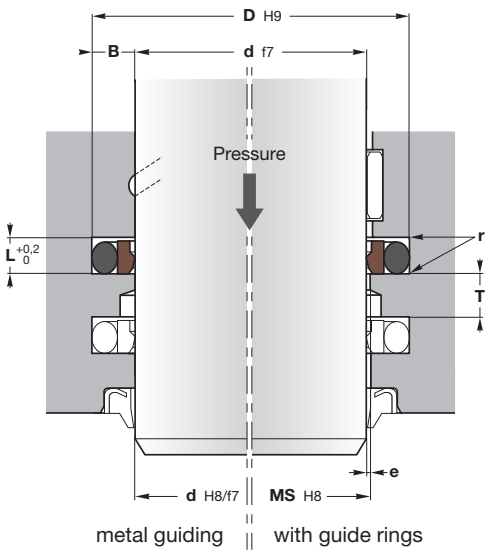

MS = d + 2e **T ≥ B**

Machining of housings: see pages 48-49

e (mm)			
L (mm)	0 - 20 MPa	20 - 40 MPa	> 40 MPa
2,2 - 3,2	0,15	0,1	H8/f7
4,2 - 6,3	0,25	0,15	
8,1	0,4	0,2	

d (mm)			r (mm)	L (mm)	D (mm)	O-ring C/S ①
10I/GR Standard serie	**10I/GR-L** Light serie	**10I/GR-P** Heavy serie				
3→7,9	8→18,9		0,4	2,2	d+4,9	1,78
8→18,9	19→37,9		0,6	3,2	+7,3	2,62
19→37,9	38→199,9	8→18,9	1,0	4,2	+10,7	3,53
38→199,9	200→255,9	19→37,9	1,3	6,3	+15,1	5,34
200→255,9	256→649,9	38→199,9	1,8	8,1	+20,5	7
256→649,9	650→999,9	200→255,9	1,8	8,1	+24	7
650→999,9	≥ 1000	256→649,9	2,5	9,5	+27,3	8,4
≥ 1000		650→999,9	3	13,8	+38	12

10I/GR...B rod seals are composed of a filled PTFE ring manufactured by machining technique combined with an O-ring that is used as an energising ring.

They are suitable for high sliding speeds due to the low friction force which is among one of the essential properties of PTFE material. Moreover, they can be used for different type of fluids by changing O-ring material.

Operating conditions

see page 8

Pressure	≤ 50 MPa
Temperature	-30°C to 100°C
Speed	≤ 15 m/s
Fluids	see pages 22-45

Materials

see pages 10-19

Energising element ①	NBR 70 Sh A
Dynamic sealing element ②	
10I/GR...B	PT55
10I/GR...B	PT15
15I/GR...B	PT53

Assembly

see pages 54-59

O-ring and PTFE-ring may easily be mounted into the grooved housings (above 12 mm)

Advantages

- Optimal sealing in tandem system
- Suitable as a primary seal (buffer)
- Small sections
- High extrusion resistance and long service life
- Low break-out and running friction
- Compatibility with nearly all media due to the high chemical resistance of the sealing element and the wide selection of O-ring compounds

Please contact us for applications approaching maximum values.

More information

On **www.all-tec-business.net**, click first on the reference and then on the material code to obtain the data sheet of the different materials.

For special requirements (fluid, temperature, pressure, speed...) or applications approaching maximum values, please contact us. Other **PTFE** and **elastomer** materials available.

10I/GR-L: Light serie
10I/GR-P: Heavy serie

d	D	L	O-ring NBR 70 Sh A	Alternative reference	Reference
190	205,1	6,3	196,22 x 5,34		**10I/GR 1900B-55/4470**
	210,5	8,1	196,22 x 7		**10I/GR-P 1900B-55/4470**
200	220,5	8,1	208,92 x 7		**10I/GR 2000B-55/4470**
210	230,5	8,1	215,27 x 7		**10I/GR 2100B-55/4470**
220	240,5	8,1	227,97 x 7		**10I/GR 2200B-55/4470**
230	250,5	8,1	240,67 x 7		**10I/GR 2300B-55/4470**
240	260,5	8,1	247 x 7		**10I/GR 2400B-55/4470**
250	270,5	8,1	259,7 x 7		**10I/GR 2500B-55/4470**
260	284	8,1	266,07 x 7		**10I/GR 2600B-55/4470**
270	294	8,1	278,77 x 7		**10I/GR 2700B-55/4470**
280	304	8,1	291,47 x 7		**10I/GR 2800B-55/4470**
290	314	8,1	300 x 7		**10I/GR 2900B-55/4470**
300	324	8,1	310,5 x 7		**10I/GR 3000B-55/4470**
310	334	8,1	316,87 x 7		**10I/GR 3100B-55/4470**
320	344	8,1	329,57 x 7		**10I/GR 3200B-55/4470**
330	354	8,1	342,27 x 7		**10I/GR 3300B-55/4470**
340	364	8,1	354,97 x 7		**10I/GR 3400B-55/4470**
350	374	8,1	367,67 x 7		**10I/GR 3500B-55/4470**
360	384	8,1	367,67 x 7		**10I/GR 3600B-55/4470**
370	394	8,1	380,37 x 7		**10I/GR 3700B-55/4470**
380	404	8,1	393,07 x 7		**10I/GR 3800B-55/4470**
400	424	8,1	412 x 7		**10I/GR 4000B-55/4470**
530	554	8,1	545,47 x 7		**10I/GR 5300B-55/4470**
650	677,3	9,5	663 x 8,4		**10I/GR 6500B-55/4470**

10I/GR...B seals with diameters between 20 and 1500 mm can be manufactured within short delivery time.
For prices and availability: **www.all-tec-business.net**

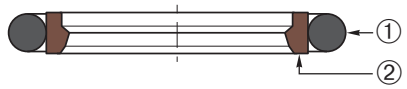

10I/GRINCH...B

Example of item code

10I/GRINCH - L 2000 B

All-Tec code | Serie | Diameter d (inch x 1000) | Profile

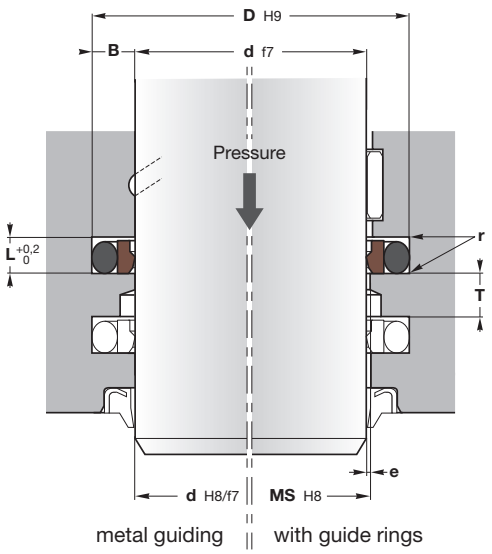

MS = d + 2e **T ≥ B**

Machining of housings: see pages 48-49

e (mm)			
L (mm)	0 - 20 MPa	20 - 40 MPa	40 - 70 MPa
2,2 - 3,2	0,15	0,1	H8/f7
4,19 - 6,3	0,25	0,15	
8,1	0,4	0,2	

10I/GRINCH...B rod seals are composed of a bronze-filled PTFE ring manufactured by machining technique combined with an O-ring that is used as an energising ring.

They are suitable for high sliding speeds due to the low friction force which is among one of the essential properties of PTFE material. Moreover, they can be used for different type of fluids by changing O-ring material.

Operating conditions see page 8

Pressure	≤ 50 MPa
Temperature	-30°C to 100°C
Speed	≤ 15 m/s
Fluids	see pages 22-45

Materials see pages 10-19

Energising element ①	NBR 70 Sh A
Dynamic sealing element ②	PT55

Assembly see pages 54-59

O-ring and PTFE-ring may easily be mounted into the grooved housings (above 12 mm)

Advantages

- Optimal sealing in tandem system
- Suitable as a primary seal (buffer)
- Small sections
- High extrusion resistance and long service life
- Low break-out and running friction
- Compatibility with nearly all media due to the high chemical resistance of the sealing element and the wide selection of O-ring compounds

Please contact us for applications approaching maximum values.

More information

On **www.all-tec-business.net**, click first on the reference and then on the material code to obtain the data sheet of the different materials.

For special requirements (fluid, temperature, pressure, speed...) or applications approaching maximum values, please contact us. Other **PTFE** and **elastomer** materials available.

10I/GRINCH-L: Light serie
10I/GRINCH-P: Heavy serie

d	D	L	O-ring NBR 70 Sh A	Reference
25,4	36,09	4,19	29,74 x 3,53	**10I/GRINCH 1000B**
28,58	39,27	4,19	32,92 x 3,53	**10I/GRINCH 1125B**
31,75	42,44	4,19	36,09 x 3,53	**10I/GRINCH 1250B**
34,93	45,62	4,19	39,7 x 3,53	**10I/GRINCH 1375B**
38,1	48,79	4,19	42,86 x 3,53	**10I/GRINCH-L 1500B**
	53,19	6,3	43,82 x 5,34	**10I/GRINCH 1500B**
44,45	55,14	4,19	49,2 x 3,53	**10I/GRINCH-L 1750B**
	59,54	6,3	50,17 x 5,34	**10I/GRINCH 1750B**
47,63	58,32	4,19	52,4 x 3,53	**10I/GRINCH 1875B**
50,8	61,49	4,19	55,56 x 3,53	**10I/GRINCH-L 2000B**
	65,89	6,3	56,52 x 5,34	**10I/GRINCH 2000B**
53,98	64,67	4,19	58,75 x 3,53	**10I/GRINCH-L 2125B**
57,15	67,84	4,19	61,9 x 3,53	**10I/GRINCH-L 2250B**
	72,24	6,3	62,87 x 5,34	**10I/GRINCH 2250B**
63,5	74,19	4,19	68,26 x 3,53	**10I/GRINCH-L 2500B**
	78,59	6,3	69,22 x 5,34	**10I/GRINCH 2500B**
66,68	81,76	6,3	72,39 x 5,34	**10I/GRINCH 2625B**
69,85	80,54	4,19	74,6 x 3,53	**10I/GRINCH-L 2750B**
	84,94	6,3	75,57 x 5,34	**10I/GRINCH 2750B**
76,2	86,89	4,19	78,97 x 3,53	**10I/GRINCH 3000B**
	91,29	6,3	81,92 x 5,34	**10I/GRINCH-L 3000B**
82,55	97,64	6,3	88,27 x 5,34	**10I/GRINCH 3250B**
88,9	99,59	4,19	91,67 x 3,53	**10I/GRINCH-L 3500B**
	103,99	6,3	94,62 x 5,34	**10I/GRINCH 3500B**
95,25	110,34	6,3	100,97 x 5,34	**10I/GRINCH 3750B**
101,6	116,69	6,3	107,32 x 5,34	**10I/GRINCH 4000**

10I/GRINCH...B seals with diameters between 20 and 1500 mm can be manufactured within short delivery time.
For prices and availability: **www.all-tec-business.net**

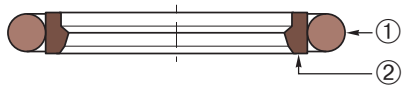

11I/GR...B

Example of item code

11I/GR 0800 B - 55/9975

Diameter **d** (mm x 10) | Profile ② | Material ②/①

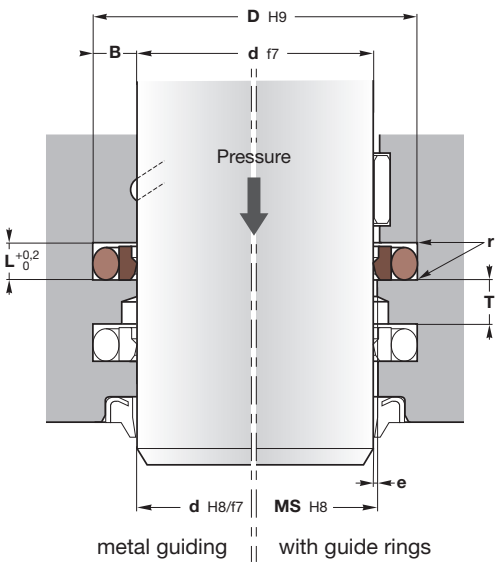

MS = d + 2e

T ≥ B

Machining of housings: see pages 48-49

e (mm)			
L (mm)	0 - 20 MPa	20 - 40 MPa	> 40 MPa
2,2 - 3,2	0,15	0,1	H8/f7
4,2 - 6,3	0,25	0,15	
8,1	0,4	0,2	

11I/GR...B rod seals are composed of bronze-filled PTFE ring manufactured by machining technique combined with a FPM O-ring that is used as an energising ring.

They are suitable for high sliding speeds due to the low friction force which is among one of the essential properties of PTFE material.

Operating conditions	see page 8
Pressure	≤ 50 MPa
Temperature	-20°C to 200°C
Speed	≤ 15 m/s
Fluids	see pages 22-45

Materials	see pages 10-19
Energising element ①	FPM 75 Sh A
Dynamic sealing element ②	PT55

Assembly — see pages 54-59

O-ring and PTFE-ring may easily be mounted into the grooved housings (above 12 mm)

Advantages

- Optimal sealing in tandem system
- Small sections
- High extrusion resistance and long service life
- Low break-out and running friction
- Compatibility with nearly all media due to the high chemical resistance of the sealing element and the wide selection of O-ring compounds

Please contact us for applications approaching maximum values.

More information

On **www.all-tec-business.net**, click first on the reference and then on the material code to obtain the data sheet of the different materials.

d (mm)			r (mm)	L (mm)	D (mm)	O-ring C/S ①
11I/GR Standard serie	**11I/GR-L** Light serie	**11I/GR-P** Heavy serie				
3→7,9	8→18,9		0,4	2,2	**d**+4,9	1,78
8→18,9	19→37,9		0,6	3,2	+7,3	2,62
19→37,9	38→199,9	8→18,9	1,0	4,2	+10,7	3,53
38→199,9	200→255,9	19→37,9	1,3	6,3	+15,1	5,34
200→255,9	256→649,9	38→199,9	1,8	8,1	+20,5	7
256→649,9	650→999,9	200→255,9	1,8	8,1	+24	7
650→999,9	≥ 1000	256→649,9	2,5	9,5	+27,3	8,4
≥ 1000		650→999,9	3	13,8	+38	12

For special requirements (fluid, temperature, pressure, speed...) or applications approaching maximum values, please contact us. Other **PTFE** and **elastomer** materials available.

11I/GR-L: Light serie **11I/GR-P**: Heavy serie

FPM energising element				
d	**D**	**L**	**O-ring** FPM 75 Sh A	**Reference**
20	30,7	4,2	23,39 x 3,53	**11I/GR 0200B-55/9975**
22	32,7	4,2	26,57 x 3,53	**11I/GR 0220B-55/9975**
25	35,7	4,2	29,74 x 3,53	**11I/GR 0250B-55/9975**
28	38,7	4,2	32,92 x 3,53	**11I/GR 0280B-55/9975**
30	40,7	4,2	34,52 x 3,53	**11I/GR 0300B-55/9975**
32	42,7	4,2	36,09 x 3,53	**11I/GR 0320B-55/9975**
35	45,7	4,2	37,69 x 3,53	**11I/GR 0350B-55/9975**
36	46,7	4,2	40,87 x 3,53	**11I/GR 0360B-55/9975**
40	50,7	4,2	44,04 x 3,53	**11I/GR-L 0400B-55/9975**
40	55,1	6,3	43,82 x 5,34	**11I/GR 0400B-55/9975**
45	55,7	4,2	49,2 x 3,53	**11I/GR-L 0450B-55/9975**
45	60,1	6,3	50,17 x 5,34	**11I/GR 0450B-55/9975**
50	60,7	4,2	53,97 x 3,53	**11I/GR-L 0500B-55/9975**
50	65,1	6,3	56,52 x 5,34	**11I/GR 0500B-55/9975**
55	65,7	4,2	59,92 x 3,53	**11I/GR-L 0550B-55/9975**
55	70,1	6,3	59,69 x 5,34	**11I/GR 0550B-55/9975**
56	71,1	6,3	62,87 x 5,34	**11I/GR 0560B-55/9975**
60	70,7	4,2	63,09 x 3,53	**11I/GR-L 0600B-55/9975**
60	75,1	6,3	66,04 x 5,34	**11I/GR 0600B-55/9975**
63	78,1	6,3	69,22 x 5,34	**11I/GR 0630B-55/9975**
65	80,1	6,3	69,22 x 5,34	**11I/GR 0650B-55/9975**
70	85,1	6,3	75,57 x 5,34	**11I/GR 0700B-55/9975**
75	90,1	6,3	79,73 x 5,34	**11I/GR 0750B-55/9975**
80	95,1	6,3	85,09 x 5,34	**11I/GR 0800B-55/9975**
85	100,1	6,3	89,69 x 5,34	**11I/GR 0850B-55/9975**
90	105,1	6,3	94,62 x 5,34	**11I/GR 0900B-55/9975**
100	115,1	6,3	107,32 x 5,34	**11I/GR 1000B-55/9975**
110	125,1	6,3	116,84 x 5,34	**11I/GR 1100B-55/9975**
120	135,1	6,3	126,37 x 5,34	**11I/GR 1200B-55/9975**
125	140,1	6,3	129,54 x 5,34	**11I/GR 1250B-55/9975**
140	155,1	6,3	145,42 x 5,34	**11I/GR 1400B-55/9975**
160	175,1	6,3	164,47 x 5,34	**11I/GR 1600B-55/9975**

All other dimensions from series 10I/GR, 10I/GR-L and 10I/GR-P are also available with FPM O-rings.

11I/GR...B seals with diameters between 20 and 1500 mm can be manufactured within short delivery time.
For prices and availability: **www.all-tec-business.net**

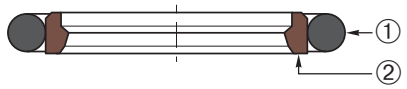

10I/GR-ISO...B

Example of item code

10I/GR-ISO 0800 B - 55/4470

Diameter **d** (mm x 10) | Profile ② | Material ②/①

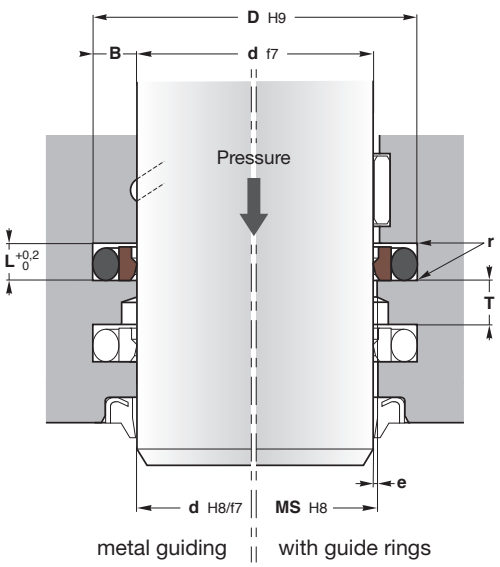

MS = d + 2e

T ≥ B

Machining of housings: see pages 48-49

e (mm)			
L (mm)	0 - 20 MPa	20 - 40 MPa	> 40 MPa
2,2 - 3,2	0,15	0,1	H8/f7
4,2 - 6,3	0,25	0,15	
8,1	0,4	0,2	

10I/GR-ISO...B rod seals are composed of bronze-filled PTFE ring manufactured by machining technique combined with an O-ring that is used as an energising ring.

They are suitable for high sliding speeds due to the low friction force which is among one of the essential properties of PTFE material. Moreover, they can be used for different type of fluids by changing O-ring material.

Operating conditions	see page 8
Pressure	≤ 50 MPa
Temperature	-30°C to 100°C
Speed	≤ 15 m/s
Fluids	see pages 22-45

Materials	see pages 10-19
Energising element ①	NBR 70 Sh A
Dynamic sealing element ②	PT55

Assembly see pages 54-59

O-ring and PTFE-ring may easily be mounted into the grooved housings (above 12 mm)

Advantages

- Optimal sealing in tandem system
- Small sections
- High extrusion resistance and long service life
- Low break-out and running friction
- Compatibility with nearly all media due to the high chemical resistance of the sealing element and the wide selection of O-ring compounds

Please contact us for applications approaching maximum values.

More information

On **www.all-tec-business.net**, click first on the reference and then on the material code to obtain the data sheet of the different materials.

d (mm) 10I/GR-ISO	L (mm)	D (mm)	O-ring C/S ①
6→14	2,2	**d** + 5	1,78
12→25	3,2	**d** + 7,5	2,62
20→63	4,2	**d** + 11	3,53
56→180	6,3	**d** + 15,5	5,34
160→250	8,1	**d** + 21	7
280→360	8,1	**d** + 24,5	7

For special requirements (fluid, temperature, pressure, speed...) or applications approaching maximum values, please contact us. Other **PTFE** and **elastomer** materials available.

ISO 7425/2				
d	**D**	**L**	**O-ring** NBR 70 Sh A	**Reference**
22	33	4,2	26,57 x 3,53	**10I/GR-ISO 0220B-55/4470**
28	39	4,2	32,92 x 3,53	**10I/GR-ISO 0280B-55/4470**
36	47	4,2	40,87 x 3,53	**10I/GR-ISO 0360B-55/4470**
45	56	4,2	49,2 x 3,53	**10I/GR-ISO 0450B-55/4470**
56	71,5	6,3	62,87 x 5,34	**10I/GR-ISO 0560B-55/4470**
70	85,5	6,3	75,57 x 5,34	**10I/GR-ISO 0700B-55/4470**
90	105,5	6,3	94,62 x 5,34	**10I/GR-ISO 0900B-55/4470**
110	125,5	6,3	116,84 x 5,34	**10I/GR-ISO 1100B-55/4470**
125	140,5	6,3	129,54 x 5,34	**10I/GR-ISO 1250B-55/4470**
140	155,5	6,3	145,42 x 5,34	**10I/GR-ISO 1400B-55/4470**
160	175,5	6,3	164,47 x 5,34	**10I/GR-ISO 1600B-55/4470**

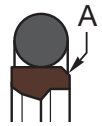

10I/GR-ISO seals for housings following ISO 7425/2 are marked with a chamfer **A** on the corner of outside diameter (pressure side). ATTENTION, outside diameter of housing is larger than the standard **10I/GR**.

10I/GR-ISO.../B seals with diameters between 20 and 1500 mm can be manufactured within short delivery time.
For prices and availability: **www.all-tec-business.net**

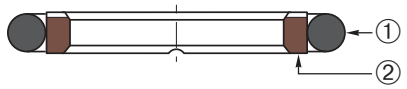

10I/GR...A

Example of item code

10I/GR 0800 A - 55/4470

Diameter **d** (mm x 10) | Profile ② | Material ②/①

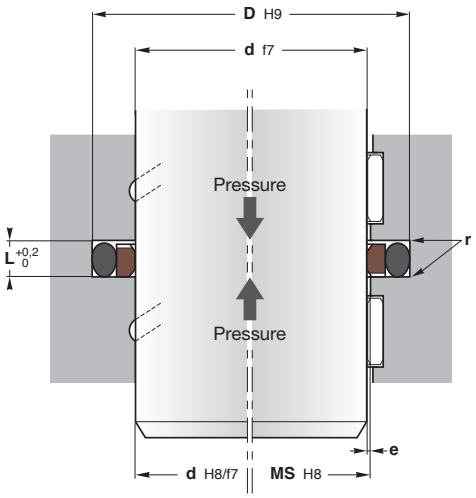

MS = d + 2e

Machining of housings: see pages 48-49

e (mm)			
L (mm)	0 - 20 MPa	20 - 40 MPa	> 40 MPa
2,2 - 3,2	0,15	0,1	H8/f7
4,2 - 6,3	0,25	0,15	
8,1	0,4	0,2	

10I/GR...A seal consist of a PTFE sealing element which is energised by an O-ring. This results in an exceptionally good sealing function under high loads.

10I/GR...A design is double-acting. It offers low friction with no stick-slip, reduced break out force and high wear resistance.

Operating conditions

see page 8

Pressure	≤ 50 MPa
Temperature	-30°C to 100°C
Speed	≤ 15 m/s
Fluids	see pages 22-45

Materials

see pages 10-19

Energising element ①	NBR 70 Sh A
Dynamic sealing element ②	PT55

Assembly

see pages 54-59

O-ring and PTFE-ring may easily be mounted into the grooved housings (above 12 mm)

Advantages

- Small sections
- High extrusion resistance and long service life
- Low break-out and running friction
- Compatibility with nearly all media due to the high chemical resistance of the sealing element and the wide selection of O-ring compounds
- Double acting

Please contact us for applications approaching maximum values.

More information

On **www.all-tec-business.net**, click first on the reference and then on the material code to obtain the data sheet of the different materials.

d (mm)			r (mm)	L (mm)	D (mm)	O-ring C/S ①
10I/GR Standard serie	**10I/GR-L** Light serie	**10I/GR-P** Heavy serie				
3→7,9	8→18,9		0,4	2,2	**d**+4,9	1,78
8→18,9	19→37,9		0,6	3,2	+7,3	2,62
19→37,9	38→199,9	8→18,9	1,0	4,2	+10,7	3,53
38→199,9	200→255,9	19→37,9	1,3	6,3	+15,1	5,34
200→255,9	256→649,9	38→199,9	1,8	8,1	+20,5	7
256→649,9	650→999,9	200→255,9	1,8	8,1	+24	7
650→999,9	≥ 1000	256→649,9	2,5	9,5	+27,3	8,4
≥ 1000		650→999,9	3	13,8	+38	12

For special requirements (fluid, temperature, pressure, speed...) or applications approaching maximum values, please contact us. Other **PTFE** and **elastomer** materials available.

d	D	L	O-ring NBR 70 Sh A	Reference
12	19,3	3,2	14,5 x 2,65	**10I/GR 0120A-30/4470**
15	22,3	3,2	18 x 2,65	**10I/GR 0150A-30/4470**
20	30,7	4,2	25 x 3,53	**10I/GR 0200A-55/4470**
22	32,7	4,2	26,58 x 3,53	**10I/GR 0220A-55/4470**
25	35,7	4,2	29,75 x 3,53	**10I/GR 0250A-55/4470**
28	38,7	4,2	32,92 x 3,53	**10I/GR 0280A-55/4470**
30	40,7	4,2	34,52 x 3,53	**10I/GR 0300A-55/4470**
35	45,7	4,2	37,69 x 3,53	**10I/GR 0350A-55/4470**
36	46,7	4,2	40,87 x 3,53	**10I/GR 0360A-55/4470**
40	55,1	6,3	43,82 x 5,34	**10I/GR 0400A-55/4470**
45	60,1	6,3	50,17 x 5,34	**10I/GR 0450A-55/4470**
50	65,1	6,3	56,52 x 5,34	**10I/GR 0500A-55/4470**
55	70,1	6,3	59,69 x 5,34	**10I/GR 0550A-55/4470**
56	71,1	6,3	62,87 x 5,34	**10I/GR 0560A-55/4470**
60	75,1	6,3	66,04 x 5,34	**10I/GR 0600A-55/4470**
63	78,1	6,3	69,22 x 5,34	**10I/GR 0630A-55/4470**
65	80,1	6,3	69,22 x 5,34	**10I/GR 0650A-55/4470**
70	85,1	6,3	75,57 x 5,34	**10I/GR 0700A-55/4470**
75	90,1	6,3	79,73 x 5,34	**10I/GR 0750A-55/4470**
80	95,1	6,3	85,09 x 5,34	**10I/GR 0800A-55/4470**
85	100,1	6,3	89,69 x 5,34	**10I/GR 0850A-55/4470**
90	105,1	6,3	94,62 x 5,34	**10I/GR 0900A-55/4470**
95	110,1	6,3	100,97 x 5,34	**10I/GR 0950A-55/4470**
100	115,1	6,3	107,32 x 5,34	**10I/GR 1000A-55/4470**

d	D	L	O-ring NBR 70 Sh A	Reference
105	120,1	6,3	110,49 x 5,34	**10I/GR 1050A-55/4470**
110	125,1	6,3	116,84 x 5,34	**10I/GR 1100A-55/4470**
115	130,1	6,3	120,02 x 5,34	**10I/GR 1150A-55/4470**
120	135,1	6,3	126,37 x 5,34	**10I/GR 1200A-55/4470**
125	140,1	6,3	129,54 x 5,34	**10I/GR 1250A-55/4470**
130	145,1	6,3	135,89 x 5,34	**10I/GR 1300A-55/4470**
135	150,1	6,3	142,24 x 5,34	**10I/GR 1350A-55/4470**
140	155,1	6,3	145,42 x 5,34	**10I/GR 1400A-55/4470**
150	165,1	6,3	155 x 5,34	**10I/GR 1500A-55/4470**
160	175,1	6,3	164,47 x 5,34	**10I/GR 1600A-55/4470**
165	180,1	6,3	170,82 x 5,34	**10I/GR 1650A-55/4470**
170	185,1	6,3	177,17 x 5,34	**10I/GR 1700A-55/4470**
180	195,1	6,3	183,52 x 5,34	**10I/GR 1800A-55/4470**
190	205,1	6,3	196,22 x 5,34	**10I/GR 1900A-55/4470**
200	220,5	8,1	208,92 x 7	**10I/GR 2000A-55/4470**
210	230,5	8,1	215,27 x 7	**10I/GR 2100A-55/4470**
220	240,5	8,1	227,97 x 7	**10I/GR 2200A-55/4470**
230	250,5	8,1	240,67 x 7	**10I/GR 2300A-55/4470**
240	260,5	8,1	253,37 x 7	**10I/GR 2400A-55/4470**
250	270,5	8,1	266,07 x 7	**10I/GR 2500A-55/4470**

10I/GR...A seals with diameters between 20 and 1500 mm can be manufactured within short delivery time.
For prices and availability: **www.all-tec-business.net**

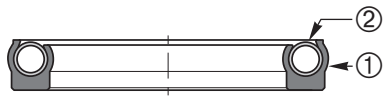

10VOR

Example of item code

10 VOR3 - 0200 - PT02 - SS

All-Tec code | Profile serie | Diameter **d** (mm x 10) | Material ① | Material ②

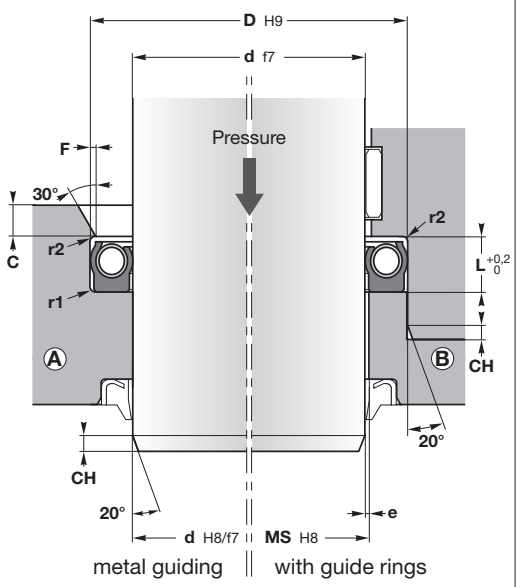

MS = d + 2e

Machining of housings: see pages 48-49

More information

On **www.all-tec-business.net**, click first on the reference and then on the material code to obtain the data sheet of the different materials.

10VOR is a single acting seal consisting of a U-shaped seal jacket and an helicoil corrosion resistant spring.

10VOR has an asymmetric seal profile. The heavy profile of its dynamic lip with an optimised front angle offers good leakage control, reduced friction and long service life. At low and zero pressure, the **metal spring provides** the primary sealing force.

As the system pressure increases, the main sealing force is achieved by the system pressure and ensures a tight seal from zero to high pressure. The possibility of **matching suitable materials for the seal and the spring** allows use in a wide range of applications beyond the field of hydraulics, e.g. in the chemical, pharmaceutical and foodstuffs industry.

Operating conditions see page 8

Pressure	
PT02	≤ 20 MPa
PT01 **on demand**	≤ 20 MPa
PT15 **on demand**	≤ 40 MPa
Temperature	-70°C to 260°C
Speed	≤ 15 m/s
Fluids	see pages 22-45

Materials see pages 10-19

Seal ①	PT02
	On demand: PT01, PT15
Spring ②	AISI 316-1.4401 = SS
	On demand: Elgiloy® (Cr-Co alloy)
	Hastelloy® (Ni-Mo-Cr alloy)

Assembly see pages 54-59

In closed grooves Ⓐ
In open grooves Ⓑ

Advantage

Resistant to most fluids
Low coefficient of friction
High abrasion resistance
No stick-slip: precision of operating control
Small section
Very high temperature range
PT01 and PT02 are FDA compliant

Serie	D (mm)	L (mm)	F (mm)	r1 (mm)	r2 (mm)	CH (mm)	C (mm)	e (mm)			
								2 MPa	10 MPa	20 MPa	40 MPa
VOR1	**d** + 2,9	2,4	0,4	0,25	0,15	1,2	0,7	≤ 0,2	≤ 0,1	≤ 0,08	≤ 0,05
VOR2	**d** + 4,5	3,6	0,6	0,4	0,15	1,5	1,1	≤ 0,25	≤ 0,15	≤ 0,1	≤ 0,07
VOR3	**d** + 6,2	4,8	0,7	0,4	0,2	2,5	1,3	≤ 0,35	≤ 0,2	≤ 0,15	≤ 0,08
VOR4	**d** + 9,4	7,1	0,8	0,4	0,25	4,5	1,4	≤ 0,5	≤ 0,25	≤ 0,2	≤ 0,1
VOR5	**d** + 12,2	9,5	0,9	0,5	0,25	6	1,6	≤ 0,6	≤ 0,3	≤ 0,25	≤ 0,12
VOR6	**d** + 19	13,5	1,5	0,5	0,4	11	2,6	≤ 0,9	≤ 0,5	≤ 0,4	≤ 0,2

For special requirements (fluid, temperature, pressure, speed...) or applications approaching maximum values, please contact us.

d	D	L	Reference
8	10,8	2,4	**10VOR1-0080-PT02-SS**
10	14,5	3,6	**10VOR2-0100-PT02-SS**
12	16,5	3,6	**10VOR2-0120-PT02-SS**
14	18,5	3,6	**10VOR2-0140-PT02-SS**
16	20,5	3,6	**10VOR2-0160-PT02-SS**
20	26,2	4,8	**10VOR3-0200-PT02-SS**
22	28,2	4,8	**10VOR3-0220-PT02-SS**
25	31,2	4,8	**10VOR3-0250-PT02-SS**
28	34,2	4,8	**10VOR3-0280-PT02-SS**
32	38,2	4,8	**10VOR3-0320-PT02-SS**
40	49,4	7,1	**10VOR4-0400-PT02-SS**
45	54,4	7,1	**10VOR4-0450-PT02-SS**
50	59,4	7,1	**10VOR4-0500-PT02-SS**
70	79,4	7,1	**10VOR4-0700-PT02-SS**
80	89,4	7,1	**10VOR4-0800-PT02-SS**
90	99,4	7,1	**10VOR4-0900-PT02-SS**
100	109,4	7,1	**10VOR4-1000-PT02-SS**

17RL

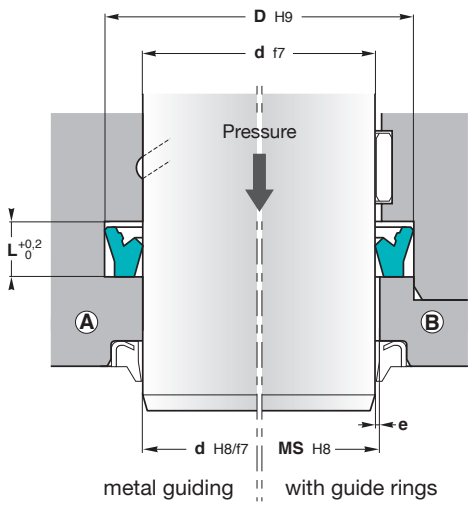

MS = d + 2e

Machining of housings: see pages 48-49

Pressure (MPa)	**e** (mm) **at 80°C**
5	≤ 0,5
10	≤ 0,5
20	≤ 0,4
30	≤ 0,3
40	≤ 0,2

17RL single-acting rod seal is an alternative to the usual PU U-rings. It is a highly effective sealing system offering optimised sealing performance and extended service life.

With exceptionally low friction properties, it has high wear resistance, exceptional **back pumping ability** along with high static and dynamic tightness.

Operating conditions	**see page 8**
Pressure	≤ 40 MPa
Temperature	-35°C to 110°C
Speed	≤ 0,5 m/s
Fluids	**see pages 22-45**

Materials	**see pages 10-19**
Seal	Z20

Assembly	**see pages 54-59**
In closed grooves Ⓐ	
In open grooves Ⓑ	

Advantages

- Low friction and long service life
- Excellent abrasion and extrusion resistance
- Back-pumping ability over the complete pressure range
- Very low stick-slip

Please contact us for applications approaching maximum values.

More information

On **www.all-tec-business.net**, click first on the reference and then on the material code to obtain the data sheet of the material.

For special requirements (fluid, temperature, pressure, speed...) or applications approaching maximum values, please contact us.

d	D	L	Reference
8	12	3,6	**17RLM000080-Z20**
	16	5	**17RLS400080-Z20**
10	18	6,3	**17RLS100100-Z20**
12	16	3,6	**17RLM100120-Z20**
15	21	5	**17RLM000150-Z20**
16	24	6,3	**17RLS100160-Z20**
30	38	6,3	**17RLM000300-Z20**
	38	8	**17RL10N0300-Z20**
32	40	7	**17RLM000320-Z20**
35	43	6,3	**17RLM000350-Z20**
36	44	6,3	**17RLS100360-Z20**
	46	10	**17RL16N0360-Z20**
40	48	9	**17RL11N0400-Z20**
	50	8	**17RL14N0400-Z20**
	50	8	**17RLS500400-Z20**
	50	10	**17RL16N0400-Z20**
	52	9	**17RLM500400-Z20**
45	55	8	**17RL14N0450-Z20**
	60	9,4	**17RLM000450-Z20**

d	D	L	Reference
48	60	11	**17RL36N0480-Z20**
50	60	8	**17RL14N0500-Z20**
	60	8	**17RLS500500-Z20**
	60	10	**17RL16N0500-Z20**
55	63	9	**17RL11N0550-Z20**
	65	10	**17RL16N0550-Z20**
60	70	10	**17RL16N0600-Z20**
63	78	12,5	**17RL26N0630-Z20**
65	75	10	**17RL16N0650-Z20**
75	85	10	**17RL16N0750-Z20**
90	105	12,5	**17RL26N0900-Z20**
100	120	12,5	**17RLSA01000-Z20**
125	145	16	**17RL30N1250-Z20**
160	180	12,5	**17RLSA01600-Z20**
180	205	20	**17RL32N1800-Z20**
195	220	20	**17RL32N1950-Z20**
200	225	20	**17RL32N2000-Z20**

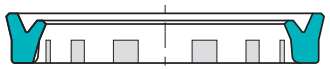

17RU9

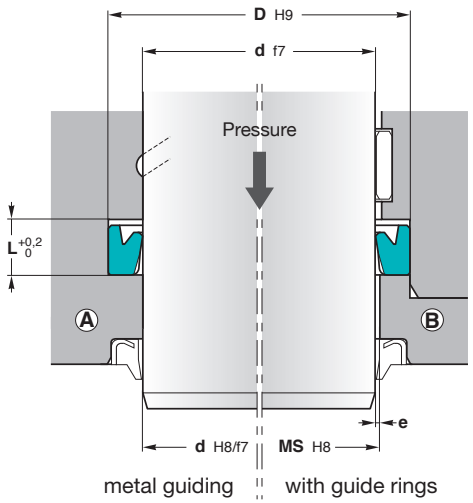

MS = d + 2e

Machining of housings: see pages 48-49

Pressure (MPa)	**e** (mm) **at 80°C**
5	≤ 0,5
10	≤ 0,5
20	≤ 0,4
30	≤ 0,3
40	≤ 0,2
50	≤ 0,1

Rod seals are particularly exposed to pressure and friction. A long service life is a specific requirement of this type of seal. **Zurcon® U-Cup RU9** can offer this with its outstanding wear and extrusion resistance.

It is also compatible with most common hydraulic oils, has a wide operating temperature range and low friction. It has compact installation dimensions and is easy to assemble.

Operating conditions	**see page 8**
Pressure	≤ 40 MPa
Temperature	-35°C to 110°C
Speed	≤ 0,5 m/s
Fluids	**see pages 22-45**

Materials	**see pages 10-19**
Seal	Z20

Assembly	**see pages 54-59**
In closed grooves Ⓐ	
In open grooves Ⓑ	

Advantages

- Low friction
- Excellent abrasion resistance
- Back-pumping ability over the complete pressure range
- Good price-performance ratio

Please contact us for applications approaching maximum values.

More information

On **www.all-tec-business.net**, click first on the reference and then on the material code to obtain the data sheet of the material.

For special requirements (fluid, temperature, pressure, speed...) or applications approaching maximum values, please contact us.

d	D	L	Reference
16	24	6,3	**17RU9000160-Z20**
22	30	6,3	**17RU9100220-Z20**
25	33	6,3	**17RU9000250-Z20**
28	36	6,3	**17RU9000280-Z20**
32	42	8	**17RU9000320-Z20**
36	44	6,3	**17RU9100360-Z20**
40	50	8	**17RU9000400-Z20**
45	55	8	**17RU9000450-Z20**
50	60	8	**17RU9000500-Z20**
56	71	12,5	**17RU9000560-Z20**
60	75	12,5	**17RU9000600-Z20**
63	78	12,5	**17RU9000630-Z20**
70	85	12,5	**17RU9000700-Z20**
90	105	12,5	**17RU9000900-Z20**
100	120	16	**17RU9001000-Z20**
110	130	16	**17RU9001100-Z20**
130	140	8	**17RU9001300-Z20**

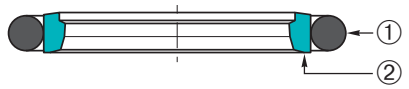

17RR

Example of item code

17 RR13 0 0800 - Z54 N

- 17: All-Tec code
- RR13: Profile serie
- 0: Type (standard)
- 0800: Diameter **d** (mm x 10)
- Z54: Material ②
- N: Material ①

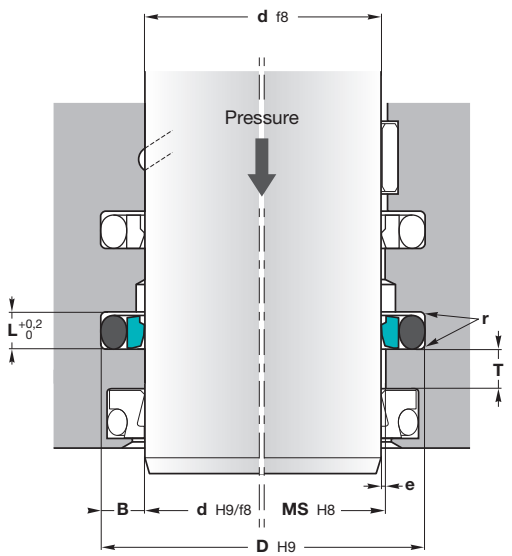

metal guiding | with guide rings

MS = d + 2e

T ≥ B

Machining of housings: see pages 48-49

Zurcon® Rimseal **17RR** is an elastomer energised seal element. The changes in seal position in the groove, necessary for optimum sealing function, are guaranteed by the combination of the two parts: the O-Ring and seal ring. In order to achieve a contact force increasing sealing effect with increasing pressure, the seal has a chamfer on the low pressure side which causes the seal to tilt slightly so that the seal ring is forced against the side of the groove. This creates an area of maximum pressure at the edge of the seal.

17RR is preferably used as secondary seal in tandem sealing systems in conjunction with Turcon® Stepseal® 2K.

Operating conditions

see page 8

Pressure	≤ 25 MPa
in tandem with **17RSK** or **17RSV**	≤ 60 MPa
Temperature	-30°C to 100°C
Speed	≤ 0,5 m/s
in tandem with **17RSK** or **17RSV**	≤ 5 m/s
Fluids	see pages 22-45

Materials

see pages 10-19

Energising element ①	NBR 70 Sh A
Dynamic sealing element ②	Zurcon® Z54

Assembly

see pages 54-59

O-ring and PU-ring may easily be mounted into the grooved housings (above 12 mm)

As the secondary seal in tandem with a **17RSK** PTFE seal as primary seal

Advantages

- High static and dynamic sealing effect
- Low friction for reduced power loss
- High wear resistance for long service life
- Small groove and easy installation

Please contact us for applications approaching maximum values.

More information

On **www.all-tec-business.net**, click first on the reference and then on the material code to obtain the data sheet of the different materials.

d (mm) RR13 Standard serie	d (mm) RR15 Light serie	d (mm) RR11 Heavy serie	L (mm)	D (mm)	r (mm)	e (mm) 10 MPa	e (mm) 20 MPa	O-ring C/S ①
8→18,9	19→37,9		3,2	**d** + 7,3	0,6	≤ 0,4	≤ 0,25	2,62
19→37,9	38→199,9	8→18,9	4,2	**d** + 10,7	1,0	≤ 0,4	≤ 0,25	3,53
38→199,9	200→255,9	19→37,9	6,3	**d** + 15,1	1,3	≤ 0,5	≤ 0,3	5,33
200→255,9	256→649,9	38→199,9	8,1	**d** + 20,5	1,8	≤ 0,6	≤ 0,35	6,99
256→649,9	650→999,9	200→255,9	8,1	**d** + 24	1,8	≤ 0,6	≤ 0,35	6,99
650→999,9	1000→2000	256→649,9	9,5	**d** + 27,3	2,5	≤ 0,7	≤ 0,5	8,4
1000→2000		650→999,9	13,8	**d** + 38	3	≤ 1	≤ 0,7	12

For special requirements (fluid, temperature, pressure, speed...) or applications approaching maximum values, please contact us.

d	D	L	Reference
10	17,3	3,2	**17RR1300100-Z54N**
16	23,3	3,2	**17RR1300160-Z54N**
18	25,3	3,2	**17RR1300180-Z54N**
20	27,3	3,2	**17RR1500200-Z54N**
20	30,7	4,2	**17RR1300200-Z54N**
22	29,3	3,2	**17RR1500220-Z54N**
22	32,7	4,2	**17RR1300220-Z54N**
25	32,3	3,2	**17RR1500250-Z54N**
25	35,7	4,2	**17RR1300250-Z54N**
28	35,3	3,2	**17RR1500280-Z54N**
28	38,7	4,2	**17RR1300280-Z54N**
30	37,7	3,2	**17RR1500300-Z54N**
30	40,7	4,2	**17RR1300300-Z54N**
32	42,7	4,2	**17RR1300320-Z54N**
35	45,7	4,2	**17RR1300350-Z54N**
36	46,7	4,2	**17RR1300360-Z54N**
40	50,7	4,2	**17RR1500400-Z54N**
40	55,1	6,3	**17RR1300400-Z54N**
45	55,7	4,2	**17RR1500450-Z54N**
45	60,1	6,3	**17RR1300450-Z54N**
50	60,7	4,2	**17RR1500500-Z54N**
50	65,1	6,3	**17RR1300500-Z54N**
55	70,1	6,3	**17RR1300550-Z54N**
56	71,1	6,3	**17RR1300560-Z54N**
60	70,7	4,2	**17RR1500600-Z54N**
60	75,1	6,3	**17RR1300600-Z54N**
63	78,1	6,3	**17RR1300630-Z54N**
65	80,1	6,3	**17RR1300650-Z54N**
70	80,7	4,2	**17RR1500700-Z54N**
70	85,1	6,3	**17RR1300700-Z54N**
75	90,1	6,3	**17RR1300750-Z54N**
80	90,7	4,2	**17RR1500800-Z54N**
80	95,1	6,3	**17RR1300800-Z54N**
85	100,1	6,3	**17RR1300850-Z54N**
90	105,1	6,3	**17RR1300900-Z54N**
95	110,1	6,3	**17RR1300950-Z54N**
100	115,1	6,3	**17RR1301000-Z54N**
105	120,1	6,3	**17RR1301050-Z54N**
110	125,1	6,3	**17RR1301100-Z54N**

d	D	L	Reference
115	130,1	6,3	**17RR1301150-Z54N**
120	135,1	6,3	**17RR1301200-Z54N**
125	140,1	6,3	**17RR1301250-Z54N**
130	145,1	6,3	**17RR1301300-Z54N**
135	150,1	6,3	**17RR1301350-Z54N**
140	155,1	6,3	**17RR1301400-Z54N**
144	159,1	6,3	**17RR1301440-Z54N**
150	165,1	6,3	**17RR1301500-Z54N**
160	175,1	6,3	**17RR1301600-Z54N**
163	178,1	6,3	**17RR1301630-Z54N**
165	180,1	6,3	**17RR1301650-Z54N**
170	185,1	6,3	**17RR1301700-Z54N**
173	188,1	6,3	**17RR1301730-Z54N**
180	195,1	6,3	**17RR1301800-Z54N**
183	198,1	6,3	**17RR1301830-Z54N**
190	205,1	6,3	**17RR1301900-Z54N**
200	220,5	8,1	**17RR1302000-Z54N**
210	230,5	8,1	**17RR1302100-Z54N**
220	240,5	8,1	**17RR1302200-Z54N**
230	250,5	8,1	**17RR1302300-Z54N**
240	260,5	8,1	**17RR1302400-Z54N**
250	270,5	8,1	**17RR1302500-Z54N**
260	284	8,1	**17RR1302600-Z54N**
265	299	8,1	**17RR1302650-Z54N**
275	299	8,1	**17RR1302750-Z54N**
280	304	8,1	**17RR1302800-Z54N**
300	324	8,1	**17RR1303000-Z54N**
310	334	8,1	**17RR1303100-Z54N**
320	344	8,1	**17RR1303200-Z54N**
330	354	8,1	**17RR1303300-Z54N**
340	364	8,1	**17RR1303400-Z54N**
350	374	8,1	**17RR1303500-Z54N**
360	384	8,1	**17RR1303600-Z54N**
380	404	8,1	**17RR1303800-Z54N**
400	424	8,1	**17RR1304000-Z54N**
420	444	8,1	**17RR1304200-Z54N**

The material Zurcon® Z52 has been changed in Zurcon® Z54

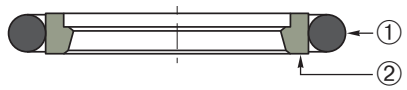

17RSK

Example of item code

17 RSK3 0 0800 - T46 N

All-Tec code | Profile serie | Type (standard) | Diameter d (mm x 10) | Material ② | Material ①

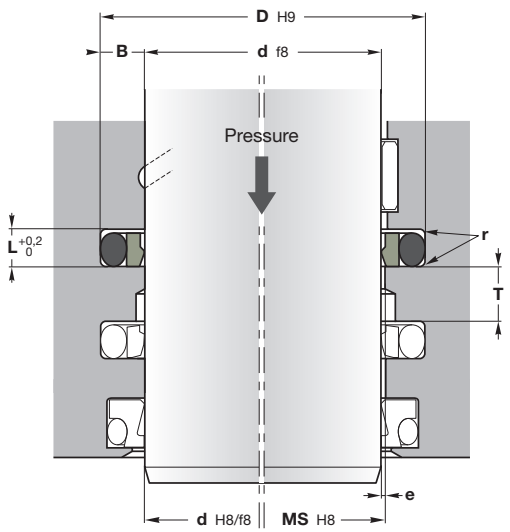

metal guiding | with guide rings

MS = d + 2e **T ≥ B**

Machining of housings: see pages 48-49

17RSK is a single-acting O-ring energised rod seal for dynamic applications, **Turcon® Stepseal® 2K** can be installed in closed grooves including grooves according to ISO 7425. It offers high sealing efficiency, low friction with no stick-slip, minimal break out force and high wear resistance.

Optimum sealing characteristics are achieved by installing a tandem Turcon® Stepseal® or Rimseal arrangement together with a double-acting scraper.

Operating conditions

see page 8

Pressure	
Turcon® T46 and M12	≤ 50 MPa
Turcon® T29	≤ 30 MPa
Temperature	-30°C to 100°C
Speed	≤ 15 m/s
Fluids	see pages 22-45

Materials

see pages 10-19

Energising element ①	NBR
Dynamic sealing element ②	Turcon® T46 Turcon® T29 **NEW:** Turcon® M12

Assembly

see pages 54-59

Advantages

Low friction, no stick-slip, long service life

Small housing and simple groove design

Please contact us for applications approaching maximum values.

More information

On **www.all-tec-business.net**, click first on the reference and then on the material code to obtain the data sheet of the different materials.

Serie	d (mm) Standard serie	d (mm) Light serie**	d (mm) Heavy serie	L (mm)	D (mm)	r (mm)	e (mm)* 10 MPa	e (mm)* 20MPa	e (mm)* 40 MPa	O-ring C/S ①
RSK0	3→7,9	8→18,9		2,2	d + 4,9	0,4	≤ 0,3	≤ 0,2	≤ 0,15	1,78
RSK1	8→18,9	19→37,9		3,2	d + 7,3	0,6	≤ 0,4	≤ 0,25	≤ 0,15	2,62
RSK2	19→37,9	38→199,9	8→18,9	4,2	d + 10,7	1	≤ 0,5	≤ 0,3	≤ 0,2	3,53
RSK3	38→199,9	200→255,9	19→37,9	6,3	d + 15,1	1,3	≤ 0,7	≤ 0,4	≤ 0,25	5,34
RSK4	200→255,9	256→649,9	38→199,9	8,1	d + 20,5	1,8	≤ 0,8	≤ 0,6	≤ 0,35	7
RSK8	256→649,9	650→999,9	200→255,9	8,1	d + 24	1,8	≤ 0,9	≤ 0,7	≤ 0,4	7
RSK5	650→999,9	≥ 1000	256→649,9	9,5	d + 27,3	2,5	≤ 1	≤ 0,8	≤ 0,5	8,4
RSK5X		1000→1200		9,5	d + 27,3	2,5	≤ 1	≤ 0,8	≤ 0,5	8,4
RSK6***			650→999,9	13,8	d + 38	3	≤ 1,2	≤ 0,9	≤ 0,6	12
RSK6X***	1000→2600			13,8	d + 38	3	≤ 1,2	≤ 0,9	≤ 0,6	12

* At pressures ≥ **40 MPa** use diameter tolerance H8/f7 (bore/rod) in the area behind seal (metal guiding).

** For easier installation in closed grooves with small rod diameters < 40 mm.

*** All O-rings with 12 mm cross section are delivered as a special profile ring

For special requirements (fluid, temperature, pressure, speed...) or applications approaching maximum values, please contact us. Other **Turcon®** and **elastomer** materials possible.

d	D	L	O-ring NBR 70 Sh A	Reference
4	8,9	2,2	5,6 x 1,8	17RSK000040-T46N
5	9,9	2,2	6,7 x 1,8	17RSK000050-T46N
6	10,9	2,2	7,65 x 1,78	17RSK000060-T46N
8	15,3	3,2	10,78 x 2,62	17RSK100080-T46N
10	17,3	3,2	12,37 x 2,62	17RSK100100-T46N
12	19,3	3,2	13,94 x 2,62	17RSK100120-T46N
14	21,3	3,2	17,12 x 2,62	17RSK100140-T46N
15	22,3	3,2	19 x 2,65	17RSK100150-T46N
16	23,3	3,2	18,72 x 2,62	17RSK100160-T46N
18	25,3	3,2	20,3 x 2,62	17RSK100180-T46N
20	27,3	3,2	22,23 x 2,62	17RSK100200-T46N
	30,7	4,2	23,39 x 3,53	17RSK200200-T46N
22	29,3	3,2	25,07 x 2,62	17RSK100220-T46N
	32,7	4,2	26,57 x 3,53	17RSK200220-T46N
25	32,3	3,2	28,24 x 2,62	17RSK100250-T46N
	35,7	4,2	29,75 x 3,53	17RSK200250-T46N
28	35,3	3,2	29,82 x 2,62	17RSK100280-T46N
	38,7	4,2	32,92 x 3,53	17RSK200280-T46N
30	37,3	3,2	32,99 x 2,62	17RSK100300-T46N
	40,7	4,2	34,52 x 3,53	17RSK200300-T46N
32	42,7	4,2	36,09 x 3,53	17RSK200320-T46N
35	42,3	3,2	37,77 x 2,62	17RSK100350-T46N
	45,7	4,2	37,69 x 3,53	17RSK200350-T46N
36	43,3	3,2	39,34 x 2,62	17RSK100360-T46N
	46,7	4,2	40,87 x 3,53	17RSK200360-T46N
37	47,7	4,2	40,87 x 3,53	17RSK200370-T46N
40	50,7	4,2	44,04 x 3,53	17RSK200400-T46N
	55,1	6,3	43,82 x 5,34	17RSK300400-T46N
42	57,1	6,3	46,99 x 5,34	17RSK300420-T46N
45	52,3	3,2	47,28 x 2,62	17RSK100450-T29N
	55,7	4,2	49,2 x 3,53	17RSK200450-T46N
	60,1	6,3	50,17 x 5,34	17RSK300450-T46N
48	63,1	6,3	53,34 x 5,34	17RSK300480-T46N
50	60,7	4,2	53,97 x 3,53	17RSK200500-T46N
	65,1	6,3	56,52 x 5,34	17RSK300500-T46N
55	65,7	4,2	59,92 x 3,53	17RSK200550-T46N
	70,1	6,3	59,69 x 5,34	17RSK300550-T46N
56	66,7	4,2	59,92 x 3,53	17RSK200560-T46N
	71,1	6,3	62,87 x 5,34	17RSK300560-T46N
60	70,7	4,2	63,09 x 3,53	17RSK200600-T46N
	75,1	6,3	66,04 x 5,34	17RSK300600-T46N
63	78,1	6,3	69,22 x 5,34	17RSK300630-T46N
65	75,7	4,2	69,44 x 3,53	17RSK200650-T29N
	75,7	4,2	69,44 x 3,53	17RSK200650-T46N
	80,1	6,3	69,22 x 5,34	17RSK300650-T46N
70	80,7	4,2	74,6 x 3,53	17RSK200700-T46N
	85,1	6,3	75,57 x 5,34	17RSK300700-T46N
75	90,1	6,3	79,73 x 5,34	17RSK300750-T46N
80	90,7	4,2	85,32 x 3,53	17RSK200800-T46N
	95,1	6,3	85,09 x 5,34	17RSK300800-T46N
85	100,1	6,3	89,69 x 5,34	17RSK300850-T46N
90	100,7	4,2	94,84 x 3,53	17RSK200900-T46N
	105,1	6,3	94,62 x 5,34	17RSK300900-T46N
95	110,1	6,3	100,97 x 5,34	17RSK300950-T46N
100	115,1	6,3	107,32 x 5,34	17RSK301000-T46N
105	120,1	6,3	110,89 x 5,34	17RSK301050-T46N
110	125,1	6,3	116,84 x 5,34	17RSK301100-T46N
115	130,1	6,3	120,02 x 5,34	17RSK301150-T46N
120	135,1	6,3	126,37 x 5,34	17RSK301200-T46N
125	140,1	6,3	129,54 x 5,34	17RSK301250-T46N
130	145,1	6,3	135,89 x 5,34	17RSK301300-T46N
135	150,1	6,3	142,24 x 5,34	17RSK301350-T46N
140	155,1	6,3	145,42 x 5,34	17RSK301400-T46N
144	159,1	6,3	151,77 x 5,34	17RSK301440-T46N
150	165,1	6,3	155 x 5,34	17RSK301500-T46N
155	170,1	6,3	158,12 x 5,34	17RSK301550-T46N

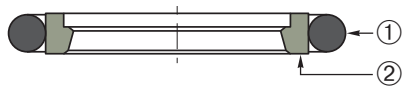

17RSK

Example of item code

17 RSK3 0 0800 - T46 N

All-Tec code | Profile serie | Type (standard) | Diameter d (mm x 10) | Material ② | Material ①

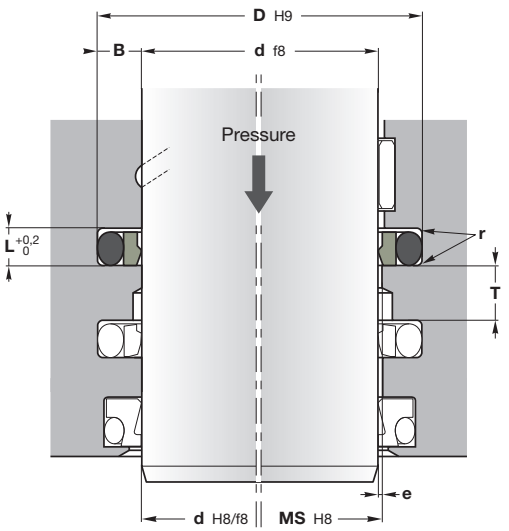

metal guiding | with guide rings

MS = d + 2e **T ≥ B**

Machining of housings: see pages 48-49

17RSK is a single-acting O-ring energised rod seal for dynamic applications, **Turcon® Stepseal® 2K** can be installed in closed grooves including grooves according to ISO 7425. It offers high sealing efficiency, low friction with no stick-slip, minimal break out force and high wear resistance.

Optimum sealing characteristics are achieved by installing a tandem Turcon® Stepseal® or Rimseal arrangement together with a double-acting scraper.

Operating conditions

see page 8

Pressure	
Turcon® T46 and M12	≤ 50 MPa
Turcon® T29	≤ 30 MPa
Temperature	-30°C to 100°C
Speed	≤ 15 m/s
Fluids	see pages 22-45

Materials

see pages 10-19

Energising element ①	NBR
Dynamic sealing element ②	Turcon® T46 Turcon® T29 **NEW:** Turcon® M12

Assembly

see pages 54-59

Advantages

Low friction, no stick-slip, long service life

Small housing and simple groove design

Please contact us for applications approaching maximum values.

More information

On **www.all-tec-business.net**, click first on the reference and then on the material code to obtain the data sheet of the different materials.

Serie	d (mm) Standard serie	d (mm) Light serie**	d (mm) Heavy serie	L (mm)	D (mm)	r (mm)	e (mm)* 10 MPa	e (mm)* 20MPa	e (mm)* 40 MPa	O-ring C/S ①
RSK0	3→7,9	8→18,9		2,2	**d** + 4,9	0,4	≤ 0,3	≤ 0,2	≤ 0,15	1,78
RSK1	8→18,9	19→37,9		3,2	**d** + 7,3	0,6	≤ 0,4	≤ 0,25	≤ 0,15	2,62
RSK2	19→37,9	38→199,9	8→18,9	4,2	**d** + 10,7	1	≤ 0,5	≤ 0,3	≤ 0,2	3,53
RSK3	38→199,9	200→255,9	19→37,9	6,3	**d** + 15,1	1,3	≤ 0,7	≤ 0,4	≤ 0,25	5,34
RSK4	200→255,9	256→649,9	38→199,9	8,1	**d** + 20,5	1,8	≤ 0,8	≤ 0,6	≤ 0,35	7
RSK8	256→649,9	650→999,9	200→255,9	8,1	**d** + 24	1,8	≤ 0,9	≤ 0,7	≤ 0,4	7
RSK5	650→999,9	≥ 1000	256→649,9	9,5	**d** + 27,3	2,5	≤ 1	≤ 0,8	≤ 0,5	8,4
RSK5X		1000→1200		9,5	**d** + 27,3	2,5	≤ 1	≤ 0,8	≤ 0,5	8,4
RSK6* **			650→999,9	13,8	**d** + 38	3	≤ 1,2	≤ 0,9	≤ 0,6	12
RSK6X* **	1000→2600			13,8	**d** + 38	3	≤ 1,2	≤ 0,9	≤ 0,6	12

* At pressures ≥ **40 MPa** use diameter tolerance H8/f7 (bore/rod) in the area behind seal (metal guiding).

** For easier installation in closed grooves with small rod diameters < 40 mm.

*** All O-rings with 12 mm cross section are delivered as a special profile ring

For special requirements (fluid, temperature, pressure, speed...) or applications approaching maximum values, please contact us. Other **Turcon®** and **elastomer** materials possible.

d	D	L	O-ring NBR 70 Sh A	Reference
160	175,1	6,3	164,47 x 5,34	**17RSK301600-T46N**
163	178,1	6,3	170,82 x 5,34	**17RSK301630-T46N**
170	185,1	6,3	177,17 x 5,34	**17RSK301700-T46N**
173	188,1	6,3	177,17 x 5,34	**17RSK301730-T46N**
180	195,1	6,3	183,52 x 5,34	**17RSK301800-T29N**
	195,1	6,3	183,52 x 5,34	**17RSK301800-T46N**
183	198,1	6,3	189,87 x 5,34	**17RSK301830-T46N**
190	205,1	6,3	196,22 x 5,34	**17RSK301900-T46N**
200	220,5	8,1	208,92 x 7	**17RSK402000-T46N**
205	225,5	8,1	215,27 x 7	**17RSK402050-T46N**
210	230,5	8,1	215,27 x 7	**17RSK402100-T46N**
220	240,5	8,1	227,97 x 7	**17RSK402200-T29N**
	240,5	8,1	227,97 x 7	**17RSK402200-T46N**
225	245,5	8,1	240,67 x 7	**17RSK402250-T46N**
230	250,5	8,1	240,67 x 7	**17RSK402300-T46N**
240	260,5	8,1	247 x 7	**17RSK402400-T46N**
250	270,5	8,1	259,7 x 7	**17RSK402500-T46N**

d	D	L	O-ring NBR 70 Sh A	Reference
260	284	8,1	266,07 x 7	**17RSK802600-T46N**
270	294	8,1	278,77 x 7	**17RSK802700-T46N**
275	299	8,1	291,47 x 7	**17RSK802750-T46N**
280	304	8,1	291,47 x 7	**17RSK802800-T46N**
285	309	8,1	291,47 x 7	**17RSK802850-T46N**
290	314	8,1	300 x 7	**17RSK802900-T46N**
300	324	8,1	310,5 x 7	**17RSK803000-T46N**
310	334	8,1	316,87 x 7	**17RSK803100-T46N**
315	339	8,1	323,2 x 7	**17RSK803150-T46N**
320	344	8,1	329,57 x 7	**17RSK803200-T46N**
330	354	8,1	342,27 x 7	**17RSK803300-T46N**
340	364	8,1	354,97 x 7	**17RSK803400-T46N**
350	374	8,1	367,67 x 7	**17RSK803500-T46N**
360	384	8,1	367,67 x 7	**17RSK803600-T46N**
380	404	8,1	393,97 x 7	**17RSK803800-T46N**
400	424	8,1	412 x 7	**17RSK804000-T46N**

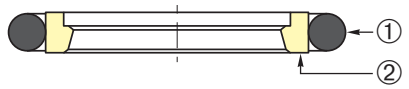

17RSK...-Z

Example of item code

17 RSK3 0 0800 - Z53 N

All-Tec code | Profile serie | Type (standard) | Diameter **d** (mm x 10) | Material ② | Material ①

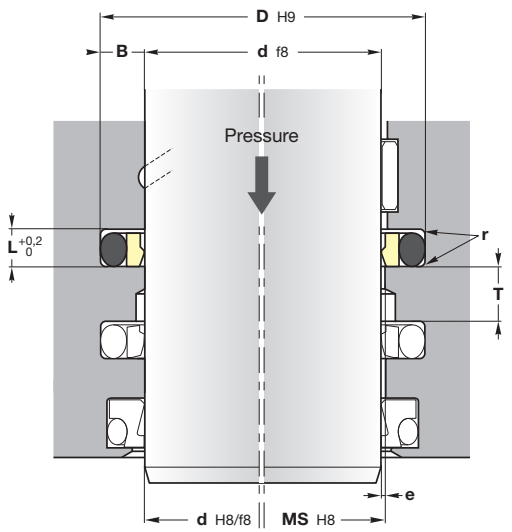

metal guiding | with guide rings

MS = d + 2e **T ≥ B**

Machining of housings: see pages 48-49

17RSK...-Z... is a single-acting O-ring energised rod seal for dynamic applications, **Zurcon® Stepseal® 2K** can be installed in closed grooves including grooves according to ISO 7425. It offers high sealing efficiency, low friction with low stick-slip, low break out force and high wear resistance.

Optimum sealing characteristics are achieved by installing a tandem Zurcon® Stepseal® or Rimseal arrangement together with a double-acting scraper.

First invented by Trelleborg® Sealing Solutions, the built-in check valve function eliminates pressure built-up and so render buffer volumes and drain lines obsolete.

Operating conditions

see page 8

Pressure	
17RSK...-Z53N	≤ 60 MPa
17RSK...-Z80N	≤ 35 MPa
Temperature	
17RSK...-Z53N	-30°C to 100°C
17RSK...-Z80N	-30°C to 80°C
Speed	≤ 2 m/s
Fluids	see pages 22-45

Materials

see pages 10-19

Energising element ①	NBR 70 Sh A
Dynamic sealing element ②	
17RSK...-Z53N	Zurcon® Z53
17RSK...-Z80N	Zurcon® Z80

Assembly

see pages 54-59

Advantages

Low friction, low stick-slip, long service life

Small housing and simple groove design

Please contact us for applications approaching maximum values.

Serie	d (mm) Standard serie	d (mm) Light serie**	d (mm) Heavy serie	L (mm)	D (mm)	r (mm)	e (mm)* 10 MPa	e (mm)* 20MPa	e (mm)* 40 MPa	O-ring C/S ①
RSK0	3→7,9	8→18,9		2,2	**d** + 4,9	0,4	≤ 0,3	≤ 0,2	≤ 0,15	1,78
RSK1	8→18,9	19→37,9		3,2	**d** + 7,3	0,6	≤ 0,4	≤ 0,25	≤ 0,15	2,62
RSK2	19→37,9	38→199,9	8→18,9	4,2	**d** + 10,7	1	≤ 0,5	≤ 0,3	≤ 0,2	3,53
RSK3	38→199,9	200→255,9	19→37,9	6,3	**d** + 15,1	1,3	≤ 0,7	≤ 0,4	≤ 0,25	5,34
RSK4	200→255,9	256→649,9	38→199,9	8,1	**d** + 20,5	1,8	≤ 0,8	≤ 0,6	≤ 0,35	7
RSK8	256→649,9	650→999,9	200→255,9	8,1	**d** + 24	1,8	≤ 0,9	≤ 0,7	≤ 0,4	7
RSK5	650→999,9	≥ 1000	256→649,9	9,5	**d** + 27,3	2,5	≤ 1	≤ 0,8	≤ 0,5	8,4
RSK5X		1000→1200		9,5	**d** + 27,3	2,5	≤ 1	≤ 0,8	≤ 0,5	8,4
RSK6* **			650→999,9	13,8	**d** + 38	3	≤ 1,2	≤ 0,9	≤ 0,6	12
RSK6X* **	1000→2600			13,8	**d** + 38	3	≤ 1,2	≤ 0,9	≤ 0,6	12

* At pressures ≥ **40 MPa** use diameter tolerance H8/f7 (bore/rod) in the area behind seal (metal guiding).

** For easier installation in closed grooves with small rod diameters < 40 mm.

*** All O-rings with 12 mm cross section are delivered as a special profile ring

For special requirements (fluid, temperature, pressure, speed...) or applications approaching maximum values, please contact us. Other **Zurcon®** and **elastomer** materials possible.

d	D	L	O-ring NBR 70 Sh A	Reference
25	32,3	3,2	28,24 x 2,62	**17RSK100250-Z53N**
35	42,3	3,2	37,77 x 2,62	**17RSK100350-Z53N**
45	55,7	4,2	49,2 x 3,53	**17RSK200450-Z80N**
	60,1	6,3	50,17 x 5,34	**17RSK300450-Z53N**
50	65,1	6,3	56,52 x 5,34	**17RSK300500-Z53N**
60	75,1	6,3	66,04 x 5,34	**17RSK300600-Z53N**
70	85,1	6,3	75,57 x 5,34	**17RSK300700-Z53N**
	85,1	6,3	75,57 x 5,34	**17RSK300700-Z80N**
80	95,1	6,3	85,09 x 5,34	**17RSK300800-Z53N**
	95,1	6,3	85,09 x 5,34	**17RSK300800-Z80N**
85	100,1	6,3	89,69 x 5,34	**17RSK300850-Z53N**
90	105,1	6,3	94,62 x 5,34	**17RSK300900-Z53N**
	105,1	6,3	94,62 x 5,34	**17RSK300900-Z80N**
95	110,1	6,3	100,97 x 5,34	**17RSK300950-Z53N**
100	115,1	6,3	107,32 x 5,34	**17RSK301000-Z53N**
105	120,1	6,3	110,89 x 5,34	**17RSK301050-Z53N**
110	125,1	6,3	116,84 x 5,34	**17RSK301100-Z53N**
140	155,1	6,3	145,42 x 5,34	**17RSK301400-Z53N**
150	165,1	6,3	155 x 5,34	**17RSK301500-Z53N**
160	175,1	6,3	164,47 x 5,34	**17RSK301600-Z80N**
	180,5	8,1	166,7 x 7	**17RSK401600-Z80N**
200	220,5	8,1	208,92 x 7	**17RSK402000-Z53N**
	220,5	8,1	208,92 x 7	**17RSK402000-Z80N**
250	270,5	8,1	259,7 x 7	**17RSK402500-Z80N**
275	299	8,1	291,47 x 7	**17RSK802750-Z53N**
280	304	8,1	291,47 x 7	**17RSK802800-Z53N**

The material Zurcon® Z51 has been changed in Zurcon® Z53

More information

On **www.all-tec-business.net**, click first on the reference and then on the material code to obtain the data sheet of the different materials.

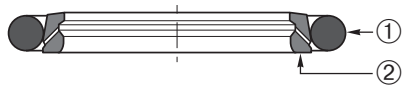

17RSV

Example of item code

17 RSV3 0 0800 - M12 N

All-Tec code | Profile serie | Type (standard) | Diameter **d** (mm x 10) | Material ② | Material ①

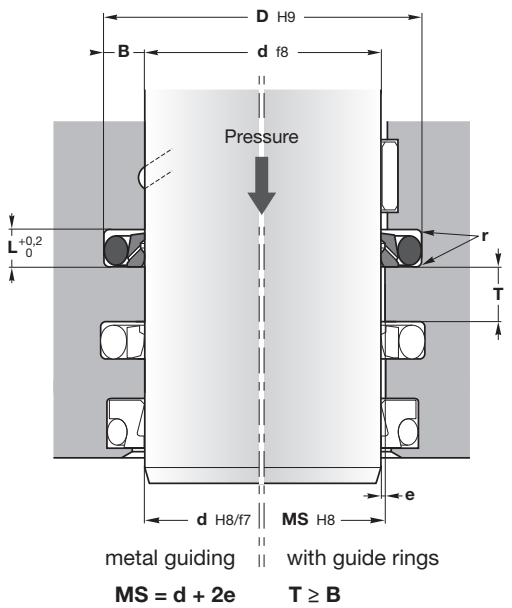

Machining of housings: see pages 48-49

17RSV Stepseal® V is based on the dynamic, unidirectional Stepseal® sealing concept. During the extending stroke of the rod, focusing of contact force on the unique Stepseal® sealing edge creates high local sealing pressure and limits the micro fluid film formation under the seal.

When the rod is retracted, the design of the full Stepseal® sealing face supports hydrodynamic **back-pumping** of the fluid film, and so ensures leak-free sealing efficiency with low friction and long service life.

In **long-stroke cylinders**, and equipment operating with low speed during retraction, it has been found that hydrodynamic back-pumping may become insufficient to prevent build-up of pressure in the seal system behind the primary seal. Pressure build-up in the seal system leads to leakage, increased friction and wear, and may ultimately require replacement of the seals.

First invented by Trelleborg Sealing Solutions, the build-in check valve function eliminates pressure build-up and so render buffer volumes and drain lines obsolete.

Operating conditions

see page 8

Pressure	
17RSV...-M12N	≤ 50 MPa
17RSV...-T46N	≤ 50 MPa
Temperature	-30°C to 100°C
Speed	≤ 15 m/s
Fluids	see pages 22-45

Materials

see pages 10-19

Energising element ①	NBR 70 ShA
Dynamic sealing element ②	
17RSV...-M12N	Turcon® M12
17RSV...-T46N	Turcon® T46

Assembly

see pages 54-59

Advantages

- Low friction
- No stick-slip
- Long service life
- Small housing and simple groove design
- Check valve function
- Stabilised position in the groove
- Hydrodynamic back-pumping

Please contact us for applications approaching maximum values.

More information

On **www.all-tec-business.net**, click first on the reference and then on the material code to obtain the data sheet of the different materials.

d	D	L	O-ring NBR 70 Sh A	Reference
45	55,7	4,2	50,39 x 3,53	**17RSV200450-M12N**
50	60,7	4,2	53,57 x 3,53	**17RSV200500-T46N**
	65,1	6,3	56,52 x 5,34	**17RSV300500-T46N**
60	75,1	6,3	66,04 x 5,34	**17RSV300600-M12N**
70	85,1	6,3	75,57 x 5,34	**17RSV300700-M12N**
80	95,1	6,3	85,09 x 5,34	**17RSV300800-M12N**
90	105,1	6,3	94,62 x 5,34	**17RSV300900-M12N**
100	115,1	6,3	107,32 x 5,34	**17RSV301000-M12N**
110	125,1	6,3	116,84 x 5,34	**17RSV301100-M12N**
	130,5	8,1	116,84 x 5,34	**17RSV401100-M12N**
140	155,1	6,3	145,42 x 5,34	**17RSV301400-M12N**
160	175,1	6,3	164,47 x 5,34	**17RSV301600-M12N**
	180,5	8,1	170,82 x 7,00	**17RSV401600-M12N**
180	195,1	6,3	183,52 x 5,34	**17RSV301800-M12N**
200	220,5	8,1	208,90 x 7,00	**17RSV402000-M12N**
250	270,5	8,1	266,07 x 7,00	**17RSV402500-M12N**
400	424	8,1	417,96 x 7,00	**17RSV804000-T46N**

Serie	d (mm)			L (mm)	D (mm)	r (mm)	e (mm)*			O-ring C/S ①
	Standard serie	Light serie	Heavy serie				10 MPa	20 MPa	40 MPa	
RSV2	12 → 37,9	38 → 199,9		4,2	**d** + 10,7	1	≤ 0,5	≤ 0,3	≤ 0,2	3,53
RSV3	38 → 199,9	200 → 255,9	19,9 → 37,9	6,3	**d** + 15,1	1,3	≤ 0,7	≤ 0,4	≤ 0,25	5,33
RSV4	200 → 255,9	256 → 649,9	38 → 199,9	8,1	**d** + 20,5	1,8	≤ 0,8	≤ 0,6	≤ 0,35	7
RSV8	256 → 649,9	650 → 999,9	200 → 255,9	8,1	**d** + 24	1,8	≤ 0,9	≤ 0,7	≤ 0,4	7
RSV5	650 → 999,9		256 → 649,9	9,5	**d** + 27,3	2,5	≤ 1	≤ 0,8	≤ 0,5	8,4
RSV5X		1000 → 1200		9,5	**d** + 27,3	2,5	≤ 1	≤ 0,8	≤ 0,5	8,4
RSV6**			650 → 999,9	13,8	**d** + 38	3	≤ 1,2	≤ 0,9	≤ 0,6	12
RSV6X**	≥ 1000			13,8	**d** + 38	3	≤ 1,2	≤ 0,9	≤ 0,6	12

* At pressures ≥ **40 MPa** use diameter tolerance H8/f7 (bore/rod) in the area behind seal (metal guiding).
** All O-rings with 12 mm cross section are delivered as a special profile ring

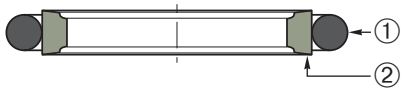

17RT

Example of item code

17 RT03 0 0800 - T46 N

All-Tec code | Profile serie | Type (standard) | Diameter **d** (mm x 10) | Material ② | Material ①

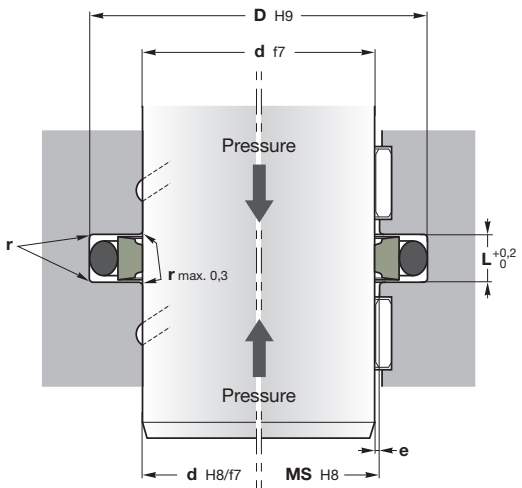

metal guiding | with guide rings

MS = d + 2e

Machining of housings: see pages 48-49

A further development of the Turcon® Glyd Ring® T provides improved leakage control and better resistance to extrusion. **17RT** is a double-acting O-ring energised rod seal for dynamic applications that can be installed in grooves according to ISO 7425. It offers low friction with no stick-slip, minimal break out force and high wear resistance.

Operating conditions	see page 8
Pressure	≤ 50 MPa
Temperature	-30°C to 100°C
Speed	≤ 15 m/s
Fluids	see pages 22-45

Materials	see pages 10-19
Energising element ①	NBR 70 Sh A
Dynamic sealing element ②	Turcon® T46

Assembly	see pages 54-59

Advantages

- Low friction
- No stick-slip
- Double acting
- Long service life
- Small section and simple groove design

Please contact us for applications approaching maximum values.

More information

On **www.all-tec-business.net**, click first on the reference and then on the material code to obtain the data sheet of the different materials.

Serie	d (mm) Standard serie	d (mm) Light serie	d (mm) Heavy serie	L (mm)	D (mm)	r (mm)	e (mm) 10 MPa	e (mm) 20 MPa	e (mm) 40 MPa	e (mm) 60 MPa	O-ring C/S ①
RT00	3→7,9	8→18,9		2,2	**d** + 4,9	0,4	≤ 0,4	≤ 0,3	≤ 0,2	H8/f7	1,78
RT01	8→18,9	19→37,9		3,2	**d** + 7,3	0,6	≤ 0,6	≤ 0,5	≤ 0,3		2,62
RT02	19→37,9	38→199,9	8→18,9	4,2	**d** + 10,7	1	≤ 0,7	≤ 0,5	≤ 0,3		3,53
RT03	38→199,9	200→255,9	19→37,9	6,3	**d** + 15,1	1,3	≤ 0,8	≤ 0,6	≤ 0,4		5,34
RT04	200→255,9	256→649,9	38→199,9	8,1	**d** + 20,5	1,8	≤ 0,8	≤ 0,6	≤ 0,4		7
RT08	256→649,9	650→999,9	200→255,9	8,1	**d** + 24	1,8	≤ 0,9	≤ 0,7	≤ 0,5		7
RT05	650→999,9	≥ 1000	256→649,9	9,5	**d** + 27,3	2,5	≤ 1	≤ 0,8	≤ 0,6		8,4
RT06**	≥ 1000		650→999,9	13,8	**d** + 38	3	≤ 1,2	≤ 0,9	≤ 0,7		12

For special requirements (fluid, temperature, pressure, speed...) or applications approaching maximum values, please contact us. Other **Turcon®** and **elastomer** materials possible.

d	D	L	O-ring NBR 70 Sh A	Reference
12	16,9	2,2	14 x 1,78	**17RT0000120-T46N**
	19,3	3,2	14,5 x 2,65	**17RT0100120-T46N**
20	27,3	3,2	21,89 x 2,62	**17RT0100200-T46N**
	30,7	4,2	25 x 3,53	**17RT0200200-T46N**
25	32,3	3,2	28,24 x 2,62	**17RT0100250-T46N**
30	40,7	4,2	34,52 x 3,53	**17RT0200300-T46N**
35	42,3	3,2	37,77 x 2,62	**17RT0100350-T46N**
	45,7	4,2	37,69 x 3,53	**17RT0200350-T46N**
40	50,7	4,2	44,04 x 3,53	**17RT0200400-T46N**
45	55,7	4,2	50,39 x 3,53	**17RT0200450-T46N**
50	60,7	4,2	53,57 x 3,53	**17RT0200500-T46N**
	65,1	6,3	56,52 x 5,34	**17RT0300500-T46N**
55	65,7	4,2	59,92 x 3,53	**17RT0200550-T46N**
56	71,1	6,3	62,87 x 5,34	**17RT0300560-T46N**
60	75,1	6,3	66,04 x 5,34	**17RT0300600-T46N**
70	85,1	6,3	75,57 x 5,34	**17RT0300700-T46N**
80	95,1	6,3	85,09 x 5,34	**17RT0300800-T46N**
85	100,1	6,3	89,69 x 5,34	**17RT0300850-T46N**
90	105,1	6,3	94,62 x 5,34	**17RT0300900-T46N**
100	115,1	6,3	107,32 x 5,34	**17RT0301000-T46N**
110	125,1	6,3	116,84 x 5,34	**17RT0301100-T46N**
125	140,1	6,3	129,54 x 5,34	**17RT0301250-T46N**
140	155,1	6,3	145,42 x 5,34	**17RT0301400-T46N**
150	165,1	6,3	155 x 5,34	**17RT0301500-T46N**
160	175,1	6,3	164,47 x 5,34	**17RT0301600-T46N**

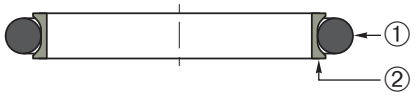

17RDD

Example of item code

17 RDD3 0 0800 - T46 N

All-Tec code | Profile serie | Type (standard) | Diameter **d** (mm x 10) | Material ② | Material ①

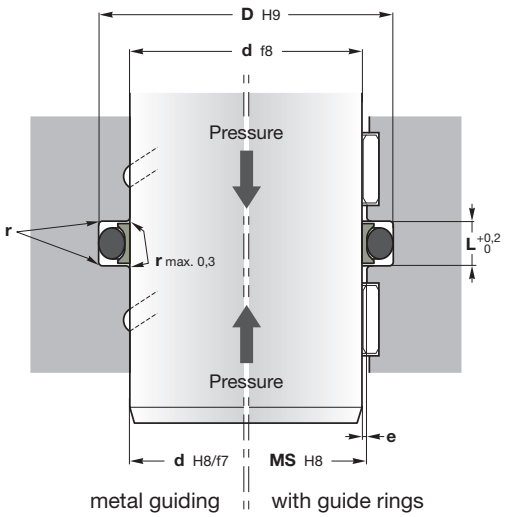

MS = d + 2e

Machining of housings: see pages 48-49

More information

On **www.all-tec-business.net**, click first on the reference and then on the material code to obtain the data sheet of the different materials.

17RDD Turcon® Double Delta® is an rubber energised PTFE seal. The seal is designed to expand and improve the service parameters of O-rings and is installed in existing O-ring grooves. Double Delta® combines the flexibility and response of O-rings with the wear and friction characteristics of the Turcon® materials in dynamic applications.

The figures below shows the cross section of the Double Delta®. The double acting performance of the seal follows from the symmetrical cross section which allow the seal to respond to pressure in both directions.

Initial contact pressure is provided by radial compression of the O-ring. When the system pressure is increased the O-ring transforms this into additional contact pressure. The contact pressure of the seal is thereby automatically adjusted ensuring sealing under all service conditions.

Operating conditions	see page 8
Pressure	≤ 35 MPa
Temperature	-30°C to 100°C
Speed	≤ 15 m/s
Fluids	see pages 22-45

Materials	see pages 10-19
Energising element ①	NBR 70 Sh A
Dynamic sealing element ②	Turcon® T46

Assembly see pages 54-59

O-ring and PTFE-ring may easily be mounted into the grooved housings (above 12 mm)

Advantages

- Low friction
- No stick-slip
- Long service life
- Small section and simple groove design
- Assembly in O-ring grooves following MIL-G-5514F
- Compatibility with nearly all media due to the high chemical resistance of the sealing element and the wide selection of O-ring compounds

Please contact us for applications approaching maximum values.

Serie	d (mm) Standard range	d (mm) Extended range	L (mm)	D (mm)	r (mm)	e (mm) 10 MPa	e (mm) 20 MPa	e (mm) 40 MPa	O-ring C/S ①
RDD0	3→9,9	2→129,9	2,4	**d** + 2,9	0,4	≤ 0,1	≤ 0,08	≤ 0,05	1,78
RDD1	10→19,9	5→249,9	3,6	**d** + 4,5	0,4	≤ 0,15	≤ 0,1	≤ 0,08	2,62
RDD2	20→39,9	5→449,9	4,8	**d** + 6,2	0,6	≤ 0,2	≤ 0,15	≤ 0,08	3,53
RDD3	40→119,9	12→649,9	7,1	**d** + 9,4	0,8	≤ 0,25	≤ 0,2	≤ 0,1	5,34
RDD4	120→649,9	60→999,9	9,5	**d** + 12,2	0,8	≤ 0,3	≤ 0,25	≤ 0,15	7
RDD5	650→999,9	110→999,9	10	**d** + 15	1	≤ 0,4	≤ 0,3	≤ 0,2	8,4

For special requirements (fluid, temperature, pressure, speed...) or applications approaching maximum values, please contact us. Other **Turcon®** and **elastomer** materials possible.

d	D	L	O-ring NBR 70 Sh A	Reference
6	8,9	2,4	6,07 x 1,78	**17RDD000060-T46N**
8	10,9	2,4	7,65 x 1,78	**17RDD000080-T46N**
10	14,5	3,6	10,77 x 2,62	**17RDD100100-T46N**
12	16,5	3,6	12,37 x 2,62	**17RDD100120-T46N**
14	18,5	3,6	13,94 x 2,62	**17RDD100140-T46N**
16	20,5	3,6	17,12 x 2,62	**17RDD100160-T46N**
18	22,5	3,6	18,72 x 2,62	**17RDD100180-T46N**
20	26,2	4,8	20,22 x 3,53	**17RDD200200-T46N**
22	28,2	4,8	21,82 x 3,53	**17RDD200220-T46N**
25	31,2	4,8	25,00 x 3,53	**17RDD200250-T46N**
28	34,2	4,8	28,17 x 3,53	**17RDD200280-T46N**
30	36,2	4,8	31,35 x 3,53	**17RDD200300-T46N**
32	38,2	4,8	32,92 x 3,53	**17RDD200320-T46N**
36	42,2	4,8	36,09 x 3,53	**17RDD200360-T46N**
40	49,4	7,1	40,64 x 5,34	**17RDD300400-T46N**
45	54,4	7,1	46,99 x 5,34	**17RDD300450-T46N**
50	59,4	7,1	50,17 x 5,34	**17RDD300500-T46N**
55	64,4	7,1	56,52 x 5,34	**17RDD300550-T46N**
56	65,4	7,1	56,52 x 5,34	**17RDD300560-T46N**
60	69,4	7,1	59,69 x 5,34	**17RDD300600-T46N**
63	72,4	7,1	62,87 x 5,34	**17RDD300630-T46N**
70	79,4	7,1	72,39 x 5,34	**17RDD300700-T46N**
80	89,4	7,1	81,92 x 5,34	**17RDD300800-T46N**
90	99,4	7,1	91,44 x 5,34	**17RDD300900-T46N**
100	109,4	7,1	100,97 x 5,34	**17RDD301000-T46N**
110	119,4	7,1	110,49 x 5,34	**17RDD301100-T46N**
125	137,2	9,5	126,37 x 7,00	**17RDD401250-T46N**
140	152,2	9,5	142,24 x 7,00	**17RDD401400-T46N**
160	172,2	9,5	164,47 x 7,00	**17RDD401600-T46N**

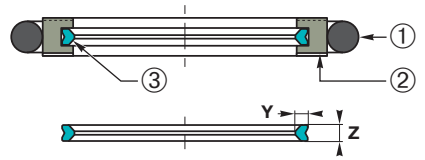

17RQB

Example of item code

17 RQB3 0 0800 - M12 N

All-Tec code; Profile serie; Type (standard); Diameter **d** (mm x 10); Material ②; Material ①

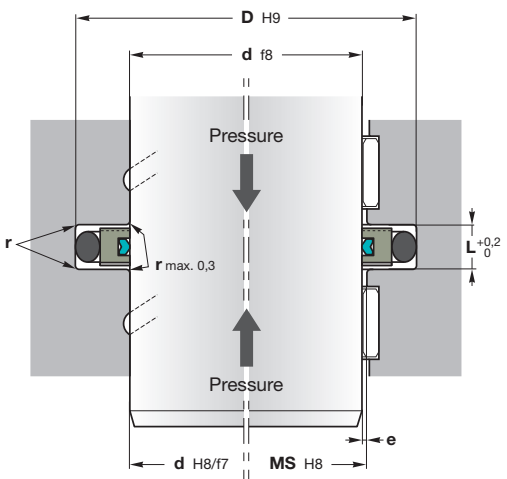

MS = d + 2e

Machining of housings: see pages 48-49

17RQB is a double-acting O-ring energised seal developed for sealing between two media such as fluid and gas. It incorporates a limited footprint polyurethane Bean Seal inset into the dynamic sealing face. Possible installation in grooves according to ISO 7425.

Operating conditions

see page 8

Pressure	≤ 40 MPa
Temperature	-30°C to 100°C
Speed	≤ 2 m/s
Fluids	see pages 22-45

Materials

see pages 10-19

Energising element ①	NBR 70 Sh A
Dynamic sealing element ②	Turcon® M12
Bean seal ③	Zurcon® Z54

Assembly

see pages 54-59

O-ring and PTFE-ring may easily be mounted into the grooved housings (above 18 mm)

Advantages

High sealing effect in applications requiring media separation, e.g. fluid/fluid or fluid/gas

Low friction

Double security trough the combination of different materials

No stick-slip

Long service life

Small section and simple groove design

Please contact us for applications approaching maximum values.

More information

On **www.all-tec-business.net**, click first on the reference and then on the material code to obtain the data sheet of the different materials.

Serie	d (mm) Standard range	d (mm) Available range	L (mm)	D (mm)	r (mm)	e (mm)* 10 MPa	e (mm)* 20 MPa	e (mm)* 40 MPa	O-ring C/S ①	Bean seal C/S Y	Bean seal C/S Z
RQB20	12→37,9	38→199,9	4,2	**d** + 10,7	1	≤ 0,5	≤ 0,3	≤ 0,2	3,53	1,7	1,7
RQB30	38→199,9	200→255,9	6,3	**d** + 15,1	1,3	≤ 0,7	≤ 0,4	≤ 0,25	5,33	1,7	1,7
RQB40	200→255,9	256→649,9	8,1	**d** + 20,5	1,8	≤ 0,8	≤ 0,6	≤ 0,35	7	2,45	2,45
RQB80	256→649,9	650→999,9	8,1	**d** + 24	1,8	≤ 0,9	≤ 0,7	≤ 0,4	7	2,45	2,45
RQB50	650→999,9		9,5	**d** + 27,3	2,5	≤ 1	≤ 0,8	≤ 0,5	8,4	3,5	3,65
RQB5X		1000→1200	9,5	**d** + 27,3	2,5	≤ 1	≤ 0,8	≤ 0,5	8,4	3,5	3,65
RQB60**			13,8	**d** + 38	3	≤ 1,2	≤ 0,9	≤ 0,6	12	5,2	5,05
RQB6X**	≥ 1000		13,8	**d** + 38	3	≤ 1,2	≤ 0,9	≤ 0,6	12	5,2	5,05

* At pressures ≥ **40 MPa** use diameter tolerance H8/f7 (bore/rod) in the area behind seal (metal guiding).

** All O-rings with 12 mm cross section are delivered as a special profile ring

d	D	L	O-ring NBR 70 Sh A	Reference
19	30	4,2	21,82 x 3,53	**17RQB200190-M12N**
25	35,7	4,2	29,75 x 3,53	**17RQB200250-M12N**
30	41	4,2	34,52 x 3,53	**17RQB200300-M12N**
40	55,5	6,3	46,99 x 5,34	**17RQB300400-M12N**
50	65,5	6,3	56,52 x 5,34	**17RQB300500-M12N**
80	95,5	6,3	85,09 x 5,34	**17RQB300800-M12N**
100	115,5	6,3	107,32 x 5,34	**17RQB301000-M12N**
130	145,5	6,3	135,89 x 5,34	**17RQB301300-M12N**

For special requirements (fluid, temperature, pressure, speed...) or applications approaching maximum values, please contact us. Other **Turcon®** and **elastomer** materials possible.

17RVA

Example of item code

17 RVA2 0 0300 - T40 S

All-Tec code | Profile serie | Type (standard) | Diameter **d** (mm x 10) | Material ① | Material ②

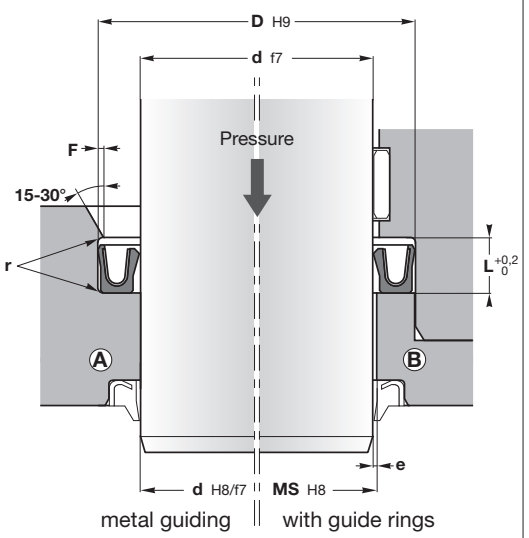

MS = d + 2e

Machining of housings: see pages 48-49

More information

On **www.all-tec-business.net**, click first on the reference and then on the material code to obtain the data sheet of the different materials.

17RVA Variseal® M2 is a single-acting rod seal energised by a special SlantCoil® spring. The advantage of the Variseal® M2 lies in its low friction and relatively constant preloading force over a relatively large deformation range. The seal is used wherever friction has to be kept within a narrow tolerance zone, for instance in pressure switches.

17RVA U-ring is a single-acting PTFE or Z80 seal in the form of an inner sealing U-ring. The steel V-Spring activates the sealing lip permanently so that even in a non-pressurised state, good sealing performance is guaranteed.

Operating conditions see page 8

Pressure	
T40	≤ 45 MPa
T05	≤ 20 MPa
Z80	≤ 40 MPa
Temperature	
T40 / T05	-70°C to 260°C
Z80	-70°C to 80°C
Speed	
T40 / T05	≤ 15 m/s
Z80	≤ 2 m/s
Fluids	see pages 22-45

Materials see pages 10-19

Seal ①	T40, T05, Z80
Spring ②	AISI 301 = S

Assembly see pages 54-59

In closed housings Ⓐ

In open housings Ⓑ

Advantages

- Resistant to most fluids
- Low coefficient of friction
- High abrasion resistance
- No stick-slip: precision of operating control
- Small section
- Very high temperature range

Please contact us for applications approaching maximum values.

Serie range	d (mm)	D (mm)	L (mm)	F (mm)	r (mm)	e (mm) 2 MPa	10 MPa	20 MPa	45 MPa
RVA0	3→9,9	**d** + 2,9	2,4	0,4	0,4	≤ 0,2	≤ 0,1	≤ 0,08	≤ 0,05
RVA1	10→19,9	**d** + 4,5	3,6	0,6	0,4	≤ 0,24	≤ 0,15	≤ 0,1	≤ 0,07
RVA2	20→39,9	**d** + 6,2	4,8	0,7	0,6	≤ 0,35	≤ 0,2	≤ 0,15	≤ 0,08
RVA3	40→119,9	**d** + 9,4	7,1	0,8	0,8	≤ 0,5	≤ 0,25	≤ 0,2	≤ 0,1
RVA4	120→999,9	**d** + 12,2	9,5	0,9	0,8	≤ 0,6	≤ 0,3	≤ 0,25	≤ 0,12
RVA5	1000→2600	**d** + 19	15	0,9	0,8	≤ 0,9	≤ 0,5	≤ 0,4	≤ 0,2

For special requirements (fluid, temperature, pressure, speed...) or applications approaching maximum values, please contact us. Other **Turcon®** and **elastomer** materials possible.

d	D	L	Reference
3	5,9	2,4	**17RVA 000030-T40S**
4	6,9	2,4	**17RVA 000040-T40S**
5	7,9	2,4	**17RVA 000050-T40S**
6	8,9	2,4	**17RVA 000060-T40S**
8	10,8	2,4	**17RVA 000080-T40S**
10	14,5	3,6	**17RVA 100100-T40S**
12	16,5	3,6	**17RVA 100120-T40S**
14	18,5	3,6	**17RVA 100140-T40S**
16	20,5	3,6	**17RVA 100160-T40S**
18	22,5	3,6	**17RVA 100180-T40S**
20	26,2	4,8	**17RVA 200200-T40S**
22	28,2	4,8	**17RVA 200220-T40S**
25	31,2	4,8	**17RVA 200250-T40S**
28	34,2	4,8	**17RVA 200280-T40S**
30	36,2	4,8	**17RVA 200300-T40S**
32	38,2	4,8	**17RVA 200320-T40S**
35	41,2	4,8	**17RVA 200350-T40S**
40	49,4	7,1	**17RVA 300400-T40S**
45	54,4	7,1	**17RVA 300450-T40S**
50	59,4	7,1	**17RVA 300500-T40S**
60	69,4	7,1	**17RVA 300600-T40S**
70	79,4	7,1	**17RVA 300700-T40S**
80	89,4	7,1	**17RVA 300800-T40S**
90	99,4	7,1	**17RVA 300900-T40S**
100	109,4	7,1	**17RVA 301000-T40S**
110	119,4	7,1	**17RVA 301100-T40S**